CUTSFORTH

# Operations Manual
# EZDP-2068 Rev J
## Shaft Grounding Assembly: Series 3



THE INFORMATION CONTAINED HEREIN IS CONFIDENTIAL AND PROPRIETARY TO CUTSFORTH AND SHALL NOT BE REPRODUCED OR DISCLOSED IN WHOLE OR PART FOR ANY DESIGN OR MANUFACTURE WITHOUT THE WRITTEN AUTHORIZATION OF CUTSFORTH.

# Table of Contents

Legal Information ..... 1
Limited Warranty ..... 1
Copyright ..... 2
Trademarks ..... 2
U.S. Government Use and Rights ..... 2
Patents ..... 3
Safety Information ..... 4
1. The Cutsforth Shaft Grounding Assembly ..... 8
1.1. Components ..... 8
1.2. Required Tools ..... 9
1.3. General Specifications ..... 9
1.4. Installation Prerequisites ..... 9
2. Installation Strategies ..... 10
2.1. Positioning the Cutsforth Shaft Grounding and Contact Assemblies ..... 10
2.2. Total Ground Wire Run Length Must Be Less Than 5 ft (1.5 m) ..... 11
3. Installation Procedure ..... 12
3.1. Installation Overview ..... 12
3.2. Installing the Attachment Arm ..... 13
3.2.1. Place the Shaft Grounding Assembly ..... 13
3.2.2. Attach the Connector Plate ..... 14
3.2.3. Insert the Elbow Assemblies ..... 15
3.2.4. Insert the Attachment Arm ..... 16
3.2.5. Secure Position and Remove the Attachment Arm ..... 17
3.2.6. Drill Holes for Set Screws ..... 19
3.2.7. Position the Shaft Grounding Assembly ..... 21
3.2.8. Secure the Shaft Grounding Assembly ..... 22
3.3. Securing the Rope Guide ..... 23
3.4. Mounting the Junction Box ..... 23
3.5. Grounding Cable Termination ..... 24
3.6. Install the Signal Cables ..... 25
4. Shaft Contact Assembly Installation ..... 26
5. Installing and Removing the Shaft Grounding and Contact Ropes ..... 27
5.1. Inserting a Rope ..... 28
5.2. Removing a Rope ..... 29
6. Disassembling the Shaft Grounding Assembly ..... 30
6.1. Disconnect the Signal Cables ..... 30
6.2. Disconnect the Ground Cable from the Unit Case ..... 31
6.3. Unmount the Junction Box Assembly ..... 31
6.4. Remove the Shaft Grounding Assembly ..... 32
7. Inspecting the Shaft Grounding Assembly ..... 33
8. Glossary ..... 34



© Cutsforth 2026 | Cutsforth.com/Support

# Legal Information

## Limited Warranty

This document is provided 'as is' and is subject to being changed, without notice, in future editions. Cutsforth reviews this document carefully for technical accuracy; however, CUTSFORTH MAKES NO EXPRESS OR IMPLIED WARRANTY AS TO THE ACCURACY OF THE INFORMATION WITHIN THIS MANUAL AS IT RELATES TO ANY SPECIFIC INSTALLATION. THE CUSTOMER IS RESPONSIBLE FOR VERIFYING INSTALLATION AND OPERATING CONDITIONS AT EACH INSTALLATION LOCATION AND FOR EACH ASSET AND EQUIPMENT TYPE ON WHICH THE PRODUCTS ARE INSTALLED OR USED. Cutsforth warrants that its hardware products will be free of defects in materials and workmanship that cause the product to fail to substantially conform to the applicable Cutsforth published specifications for one (1) year from the date of invoice.

For a period of ninety (90) days from the date of invoice, Cutsforth warrants that its software products will perform substantially in accordance with the applicable documentation provided with the software. Software or services provided on a subscription, hosted, or software-as-a-service basis are governed by the applicable license, subscription, or services agreement, and the warranty terms of that agreement control for those offerings. If Cutsforth receives notice of a defect or non-conformance during the applicable warranty period, Cutsforth will, in its discretion: (i) repair or replace the affected product, or (ii) refund the fees paid for the affected product. Repaired or replaced hardware will be warranted for the remainder of the original warranty period or ninety (90) days, whichever is longer. If Cutsforth elects to repair or replace the product, Cutsforth may use new or refurbished parts or products that are equivalent to new in performance and reliability and are at least functionally equivalent to the original part or product. You must obtain an RMA number from Cutsforth before returning any product to Cutsforth. Cutsforth reserves the right to charge a fee for examining and testing hardware not covered by the Limited Warranty.

This Limited Warranty does not apply if the defect of the product resulted from improper or inadequate maintenance, installation, repair, or calibration performed by a party other than Cutsforth; unauthorized modification; improper environment; use of an improper hardware or software key; improper use or operation outside of the specification for the product; improper voltages; accident, abuse, or neglect; or a hazard such as lightning, flood, or other act of nature.

If Customer and Cutsforth have entered into a separate signed written agreement governing the products or services, the terms of that agreement control to the extent they conflict with this statement.

THE REMEDIES SET FORTH ABOVE ARE EXCLUSIVE AND THE CUSTOMER'S SOLE REMEDIES, AND SHALL APPLY EVEN IF SUCH REMEDIES FAIL OF THEIR ESSENTIAL PURPOSE.

WARNING REGARDING USE OF CUTSFORTH PRODUCTS: CUSTOMER IS ULTIMATELY RESPONSIBLE FOR VERIFYING AND VALIDATING THE SUITABILITY AND RELIABILITY OF THE PRODUCTS WHENEVER THE PRODUCTS ARE INCORPORATED IN THEIR SYSTEM OR APPLICATION, INCLUDING THE APPROPRIATE DESIGN, PROCESS, AND SAFETY LEVEL OF SUCH SYSTEM OR APPLICATION. PRODUCTS ARE NOT DESIGNED, MANUFACTURED, OR TESTED FOR USE IN LIFE OR SAFETY CRITICAL SYSTEMS, OR ANY OTHER APPLICATION IN WHICH THE FAILURE OF THE PRODUCT


© Cutsforth 2026 | Cutsforth.com/Support

OR SERVICE COULD LEAD TO DEATH, PERSONAL INJURY, SEVERE PROPERTY DAMAGE OR ENVIRONMENTAL HARM (COLLECTIVELY, "HIGH-RISK USES"). CUTSFORTH PRODUCTS ARE MONITORING, MEASUREMENT, AND DIAGNOSTIC TOOLS; THEY ARE NOT PROTECTIVE DEVICES OR SAFETY SYSTEMS, AND THEY ARE NOT A SUBSTITUTE FOR CUSTOMER'S OWN INSPECTION, MAINTENANCE, AND ENGINEERING JUDGMENT. CUTSFORTH DOES NOT WARRANT THAT THE PRODUCTS WILL DETECT, PREDICT, OR PREVENT ANY PARTICULAR FAULT, CONDITION, OR FAILURE. FURTHER, PRUDENT STEPS MUST BE TAKEN TO PROTECT AGAINST FAILURES, INCLUDING PROVIDING BACK-UP AND SHUT-DOWN MECHANISMS. CUTSFORTH EXPRESSLY DISCLAIMS ANY EXPRESS OR IMPLIED WARRANTY OF FITNESS OF THE PRODUCTS OR SERVICES FOR HIGH-RISK USES.

TO THE MAXIMUM EXTENT PERMITTED BY APPLICABLE LAW, CUTSFORTH DOES NOT WARRANT, GUARANTEE, OR MAKE ANY REPRESENTATIONS REGARDING THE USE OF OR THE RESULTS OF THE USE OF THE PRODUCTS — INCLUDING ANY DATA, MEASUREMENTS, ALERTS, ANALYTICS, OR REPORTS GENERATED BY THE PRODUCTS — IN TERMS OF CORRECTNESS, ACCURACY, RELIABILITY, COMPLETENESS, OR OTHERWISE. CUTSFORTH DOES NOT WARRANT THAT THE OPERATION OF THE PRODUCTS WILL BE UNINTERRUPTED OR ERROR FREE. INCIDENTAL AND CONSEQUENTIAL DAMAGES, INCLUDING LOSS OF USE, LOSS OF DATA, AND LOSS OF PROFITS, ARE SPECIFICALLY EXCLUDED FROM THIS WARRANTY; THE MAXIMUM VALUE OF A WARRANTY CLAIM CANNOT EXCEED THE ORIGINAL VALUE OF THE AFFECTED ASSEMBLY OR COMPONENT. SOME JURISDICTIONS DO NOT ALLOW THE EXCLUSION OR LIMITATION OF IMPLIED WARRANTIES OR OF INCIDENTAL OR CONSEQUENTIAL DAMAGES; IN THOSE JURISDICTIONS, THE ABOVE EXCLUSIONS AND LIMITATIONS APPLY TO THE MAXIMUM EXTENT PERMITTED BY LAW.

## Copyright

Under copyright law, this publication may not be reproduced or transmitted in any form, electronic or mechanical, including photocopying, recording, storing in an information retrieval system, or translating, in whole or in part, without the prior written consent of Cutsforth. Cutsforth respects the intellectual property of others, and we ask our users to do the same. Cutsforth software is protected by copyright and other intellectual property laws. Cutsforth software is licensed, not sold, and may be installed and used only in accordance with the applicable license or subscription terms, including any restriction to the hardware or systems for which it was licensed. Reproduction of software or written materials is prohibited unless Customer has obtained a license for that express purpose.

## Trademarks

Cutsforth and the Cutsforth logo are trademarks of Cutsforth, Inc. All other trademarks are the property of their respective owners.

## U.S. Government Use and Rights

Cutsforth products are commercial products, and Cutsforth services are commercial services, as those terms are defined in FAR 2.101. Cutsforth hardware products, where offered without modification and sold in substantial quantities in the commercial marketplace, are commercially available off-the-shelf (COTS) items as defined in FAR 2.101. Cutsforth products were developed exclusively at private expense.

Cutsforth software is commercial computer software, and the accompanying documentation is commercial computer software documentation. If the software or documentation is acquired by or on

behalf of the U.S. Government or a U.S. Government prime contractor or subcontractor (at any tier), the Government's rights in the software and documentation are only those set forth in the applicable Cutsforth license or subscription agreement, in accordance with FAR 12.212 and DFARS 227.7202-1 through 227.7202-4, or the successor provisions thereto. Technical data provided with Cutsforth products is furnished with limited rights in accordance with DFARS 252.227-7015 where applicable.

Cutsforth products and hosted services are not authorized for the processing or storage of classified information. Unless expressly agreed by Cutsforth in a signed writing, Cutsforth products and hosted services are not intended or authorized for the processing or storage of Controlled Unclassified Information (CUI). Customer is responsible for ensuring that information provided to or generated within Cutsforth products and services complies with the information-security, export-control, and critical infrastructure information requirements applicable to Customer, including, where applicable, requirements governing CUI and Critical Energy/Electric Infrastructure Information (CEII).

## Patents

Please send patent information requests to patents@cutsforth.com.


© Cutsforth 2026 | Cutsforth.com/Support

# Safety Information

## Safety Information [English]

Following is important safety information. For safe installation and operation of this equipment, be sure to read and understand all cautions and warnings.

### Safety Conventions

**NOTE:**

Additional information.

**ELECTRICAL DANGER**

Indicates an action or specific equipment area that can result in personal injury or death from an electrical hazard if proper precautions are not taken.

**CAUTION**

Indicates a hazardous situation that, if not avoided, could result in minor or moderate injury or equipment damage.

**WARNING**

Indicates a hazardous situation that, if not avoided, could result in death or serious injury.

**ROTATING PART CAUTION**

Indicates possible injury from rotating parts.

**DANGER**

Indicates a hazardous situation that, if not avoided, will result in death or serious injury.

### General Safety Instructions

**ELECTRICAL DANGER**

Only qualified personnel who recognize shock hazards and are familiar with the safety precautions required to avoid injury should work with Cutsforth products. Among the many considerations are the following:

- Avoid contact with energized circuits.
- Avoid contact with rotating parts.
- Never install any component that appears not to be functioning in a normal manner.
- Always ensure proper installation of the holder assembly and shaft grounding rope.


© Cutsforth 2026 | Cutsforth.com/Support



## ELECTRICAL DANGER

Before working on the generator, de-energize, lock out, and tag out all power sources to the generator, shaft, and accessory devices. Electric shock and death may result due to failure to heed this warning.



## ROTATING PART CAUTION

High-voltage and rotating parts can cause serious or fatal injury. Installation, operation, and maintenance of this product must be performed only by qualified personnel, in accordance with all applicable safety regulations and guidelines.



## WARNING

Cutsforth recommends that workers do not change Shaft Contact Assembly (SCA) meter ropes while the generator is energized and/or operational. It is recommended that meter ropes be inspected and if necessary, changed during outages when the generator has been secured. Since the SCA is generally installed in relatively close proximity to the collector/brush gear (energized equipment) and or other rotating hazards in this area of the generator, it may pose a risk to workers that may include but are not limited to the following:

- Risk of entanglement or rotational injury attempting to remove/insert a meter rope.
- Risk of electrical shock.
- Risk of creating a short circuit between energized parts and ground.

These conditions and limitations are to be carefully considered at the time of installation. It is recommended that procedures and policies be implemented by the end user so as to realize the full function of the monitoring system but avoid potential hazards. These conditions generally do not apply to the Shaft Grounding Assembly (SGA) equipment installation.



## LIFTING EQUIPMENT

For configurations that weigh more than 18 kg (40 lbs.), please utilize team lifting techniques to lift and move the equipment, including lifting with the legs, and avoid twisting while moving the equipment.


© Cutsforth 2026 | Cutsforth.com/Support

# Consignes de Sécurité [Français]

Les informations qui suivent sont essentielles afin d'assurer la sécurité de l'utilisateur lors de l'installation et de l'opération de l'équipement. Assurez-vous de bien lire et de comprendre tous les avertissements et mises en garde qui suivent.

## Conventions de Sécurité



### NOTE:

Informations supplémentaires.



### RISQUES DE CHOC ÉLECTRIQUE

Indique que l'action ou la partie de l'équipement concernée peut mener à des blessures par électrisation ou à la mort par électrocution si les précautions adéquates ne sont pas prises.



### MISE EN GARDE

Indique la présence d'une situation dangereuse qui, si elle n'est pas évitée, pourrait mener à des blessures mineures à modérées ou à des dommages matériels.



### AVERTISSEMENT

Indique la présence d'une situation dangereuse qui, si elle n'est pas évitée, pourrait mener à des blessures sévères ou à la mort.



### MISE EN GARDE : PIÈCE ROTATIVE

Indique la présence de pièces d'équipement rotatives pouvant causer des blessures.



### DANGER

Indique la présence d'une situation dangereuse qui, si elle n'est pas évitée, pourrait mener à des blessures sévères ou à la mort.

## Consignes de Sécurité Générales



### RISQUES DE CHOC ÉLECTRIQUE

L'utilisation des produits Cutsforth n'est recommandée qu'aux professionnels qualifiés qui savent comment reconnaître la présence de risques de choc électrique ainsi que les consignes de sécurité à suivre pour éviter les blessures liées à ces risques. Lesdites consignes de sécurité incluent, sans s'y limiter :

- Éviter tout contact avec des circuits alimentés;
- Éviter tout contact avec des pièces d'équipement rotatives;
- Ne jamais installer de composante ne paraissant pas fonctionner normalement;
- Toujours s'assurer que la structure de soutien et le câble de terre de l'arbre de la génératrice sont correctement installés.


© Cutsforth 2026 | Cutsforth.com/Support



## RISQUES DE CHOC ÉLECTRIQUE

Avant de travailler sur la génératrice, désalimentez, cadenassez et étiquetez toutes les sources d'énergies liées à la génératrice, à l'arbre et aux appareils accessoires. L'opérateur s'expose à des risques de chocs électriques pouvant causer la mort s'il ne tient pas compte de cet avertissment.



## MISE EN GARDE : PIÈCE ROTATIVE

Les pièces d'équipement rotatives et sous haute tension peuvent causer des blessures sévères ou fatales. L'installation, l'opération et la manutention de ce produit ne doivent être faites que par des professionnels qualifiés et en respectant toutes les règles et consignes de sécurité applicables.



## AVERTISSEMENT

Cutsforth recommande aux travailleurs de ne pas changer les câbles de mesure de l'ensemble de contact avec l'arbre (ECA) lorsque le générateur est alimenté et/ou opérationnel. Il est recommandé d'inspecter les câbles de mesure et, si nécessaire, de les changer pendant les arrêts, lorsque le générateur a été sécurisé. Étant donné que l'ECA est généralement installé relativement près du collecteur et des frotteurs (lesquels sont sous tension) ainsi que d'autres composantes rotatives, l'utilisation ou la manutention de l'ECA peut présenter des risques pour les travailleurs, qui peuvent inclure les éléments suivants, sans s'y limiter :

- Risques d'être blessé par des composantes rotatives ou d'être coincé dans celles-ci en tentant d'enlever ou d'insérer un câble de mesure;
- Risques de choc électrique;
- Risques de créer un court-circuit entre des composantes alimentées et la mise à la terre.

Ces conditions et contraintes doivent être attentivement prises en considération lors de l'installation de l'ECA. Il est recommandé que l'utilisateur final implémente des protocoles et des politiques visant à s'assurer que le système de surveillance puisse être utilisé en évitant les risques potentiels liés à celui-ci sans compromettre son efficacité. Ces conditions ne s'appliquent généralement pas lors de l'installation de l'ensemble de mise à la terre de l'arbre (EMTA).



## ÉQUIPEMENT DE LEVAGE

Pour les configurations pesant plus de 18 kg (40 lb), veuillez recourir à des techniques de levage en équipe pour soulever et déplacer l'équipement — notamment en sollicitant les jambes — et évitez toute torsion du corps lors du déplacement.


© Cutsforth 2026 | Cutsforth.com/Support

# 1. The Cutsforth Shaft Grounding Assembly

This manual describes the installation of the Cutsforth Shaft Grounding Assembly.

If this system is replacing an OEM system, see the documentation that came with the OEM system for instructions on how to remove it.

## 1.1. Components

These parts are included in the Shaft Grounding Assembly installation package:

1 Shaft Grounding Assembly with Junction Box

Part # EGSA-310

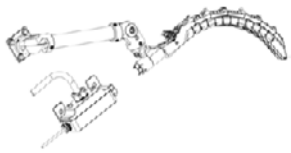

2 Shaft grounding ropes

Part # EGHK-205

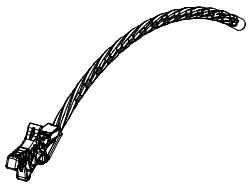

1 Weldless attachment arm assembly

Part # EGSA-301

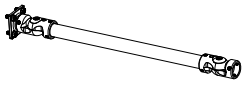

1 Rope guide spacer (1/16" thick)

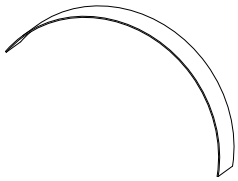

1 Custom drill bushing for weldless attachment arm elbow

Part # EGSM-308

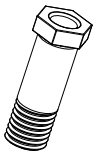

1 Custom drill bit assembly (0.201" Dia)

Part # EGSM-309



[Optional] 1 Shaft Contact Assembly with Junction Box

Part # EGSA-320

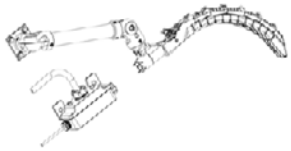



© Cutsforth 2026 | Cutsforth.com/Support

## 1.2. Required Tools

- 1/2" hex wrench socket or IP40 Torx Plus bit
- 1/4" hex key wrench
- 3/16" hex key wrench
- 5/32" hex key wrench
- 5/16" hex key wrench
- Drill
- 5/16"-18 tap
- Letter F drill bit
- Wire cutters
- Wire strippers
- Wire crimpers
- Tape, banding, and/or clamps
- Saw for cutting 1.25" diameter pipe
- Torque wrench (min torque required: 100 in-lbs, max torque required: 70 ft-lbs)

## 1.3. General Specifications

- Rope guide width: 1.25" (3.18 cm)
- Compatible with 3/4" flexible conduit
- Attachment Arm mounting bracket dimensions: 2.5" x 2.5" (6.4 cm x 6.4 cm)
- Maximum operating temperature of the Shaft Grounding Assembly: 300˚F (149˚C)
- Minimum shaft diameter: 5" (13 cm)

## 1.4. Installation Prerequisites

- The shaft must be fully coupled.
- The generator and turbine bearing caps in the load compartment must be fully installed.
- The condition of the shaft at the Shaft Grounding Assembly installation location must be documented by photo or video. If the shaft is still rotating, use a strobe to capture a video of the shaft condition. To facilitate a robust electrical contact for the shaft grounding system, make sure that the shaft surface is free of grooving, pitting, oxidation, and contamination.



### ELECTRICAL DANGER

Before working on the generator, de-energize, lock out, and tag out all power sources to the generator, shaft, and accessory devices. Electric shock and death may result due to failure to heed this warning.


© Cutsforth 2026 | Cutsforth.com/Support

# 2. Installation Strategies

Determine the best component locations for your installation by applying the following strategies.

## 2.1. Positioning the Cutsforth Shaft Grounding and Contact Assemblies

The Cutsforth Shaft Grounding Assembly shall be installed on the same portion of exposed shaft as the previous grounding equipment, unless an alternate location is approved by Cutsforth and/or the generator manufacturer.

The optional Cutsforth Shaft Contact Assembly is installed on an exposed portion of the shaft at the exciter-end of the generator at a location at which a secondary shaft voltage measurement is desired. Both the Shaft Grounding Assembly and Shaft Contact Assembly must be installed on the "uphill" side of the shaft rotation. Installing on this side of the shaft ensures that the rope does not bunch up or bind up inside the rope guide. The following illustration shows the correct orientation on the left.

Verify that there is adequate spacing on all dimensions of the SGA and/or SCA assemblies including the support arm and mounting point. Consider both the hot and cold operational conditions, and account for thermal expansion when installing in narrow clearance locations. Factors such as generator type may affect the clearances needed to account for thermal expansion.

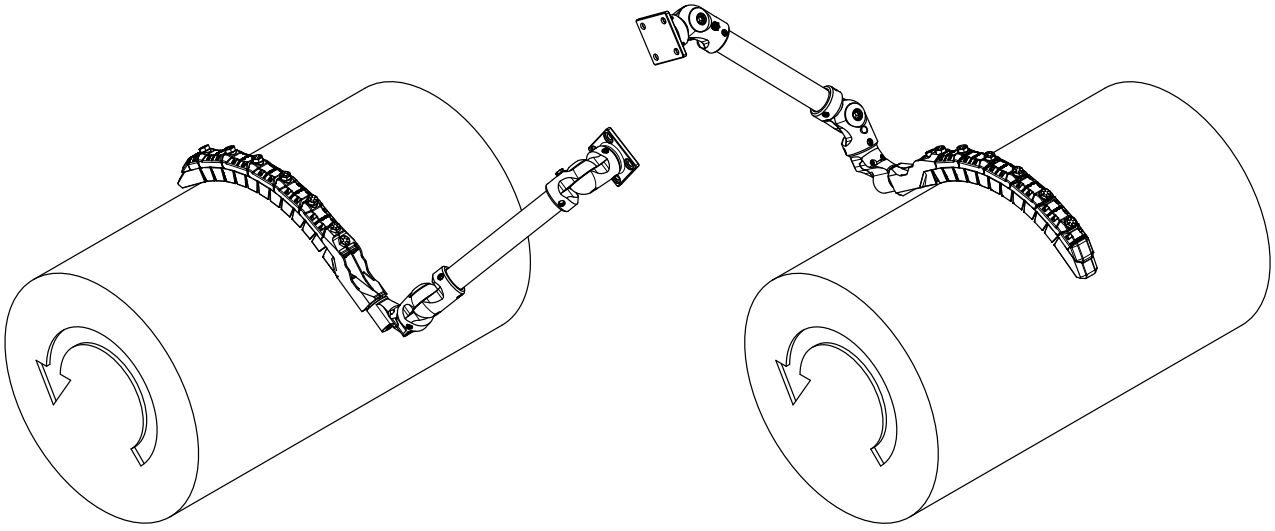



© Cutsforth 2026 | Cutsforth.com/Support

## 2.2. Total Ground Wire Run Length Must Be Less Than 5 ft (1.5 m)

To maximize the effectiveness of the Shaft Grounding Assembly (SGA), the wire run length must be minimized. The 8 AWG wire will run from the Shaft Grounding Assembly directly to unit case ground. Cutsforth requires that the total run length of the ground wire be less than 5 ft (1.5 m).

The goal when choosing a grounding location is to electrically bond the shaft to the unit case. The unit case is defined by the lower half of either the turbine case, generator case, or coupler case near the SGA to which the shaft can be grounded. Cutsforth suggests drilling and tapping into the lower half of the unit case to create a grounding location close to the Shaft Grounding Assembly. The location at which the ground wire will terminate should have all paint removed and should be free of all contaminants in order to create a smooth, conductive surface. Structural steel and station ground are examples of unacceptable grounding locations. It is important to note that it is not necessary for the ground conductor to be grounded to an existing generator grounding pad.


© Cutsforth 2026 | Cutsforth.com/Support

# 3. Installation Procedure

Before installation, remove all original/OEM shaft grounding system equipment and clean the shaft of any surface defects, rust, and other contaminants. Review the documentation for the original/OEM shaft grounding system to plan its removal.

## 3.1. Installation Overview

The following figure shows the Shaft Grounding Assembly installed. The installation consists of these main parts:

- Rope Guide **(A):** The portion of the Shaft Grounding Assembly that lays over the shaft and holds the grounding and metering ropes.
- Attachment Arm **(B):** A pipe that connects the Shaft Grounding Assembly to the unit housing.
- Junction Box **(C):** An enclosure that houses the ground current sensing circuitry.

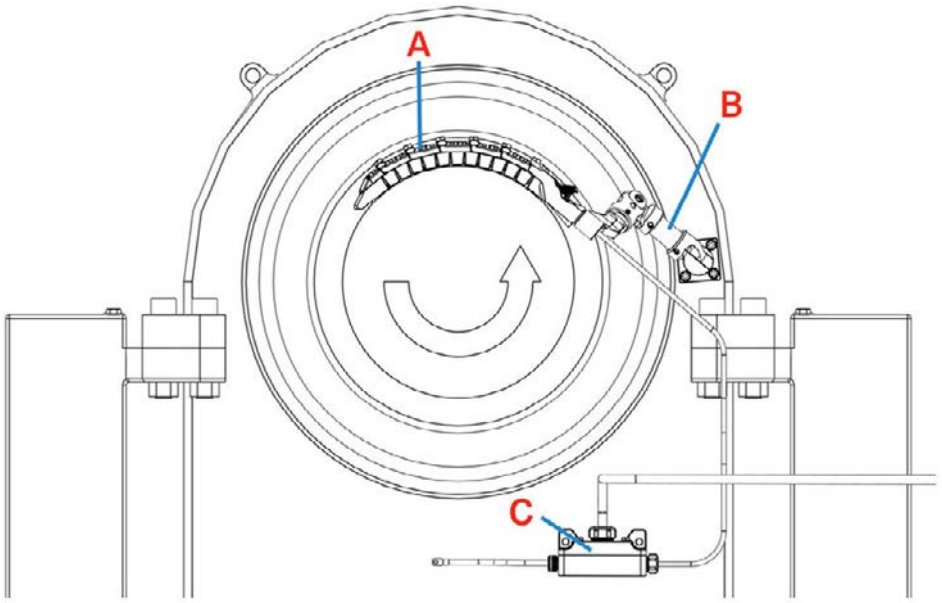



© Cutsforth 2026 | Cutsforth.com/Support

These are the main tasks in the installation procedure:

1. **Installing the attachment arm.** The length of the attachment arm varies with each installation, so you must temporarily place the Shaft Grounding Assembly on the shaft in order to measure the required length of the attachment arm. The attachment arm is then cut to size, inserted into the mounting hardware, and locked in position with set screws.
2. **Securing the rope guide.** The rope guide must be precisely positioned to match the contour of the shaft. This is accomplished by tightening bolts at the top of the rope guide.
3. **Mounting the Junction Box.** The Junction Box must be mounted to a secure structure within 4 ft of the Shaft Grounding Assembly.

The following procedures provide detailed installation instructions.

# 3.2. Installing the Attachment Arm

## 3.2.1. Place the Shaft Grounding Assembly

1. Place the 1/16" thick rope guide spacer **(A)** over the shaft **(B)**. The arrow indicates the shaft rotation direction.
2. Set the Shaft Grounding Assembly **(C)** on the rope guide spacer as shown the following figure. Orient the Shaft Grounding Assembly such that the mid-point of the rope guide is at the 12 o'clock position.
3. Temporarily attach the assembly to the shaft using hands, clamps, tape, banding, or a wooden frame.

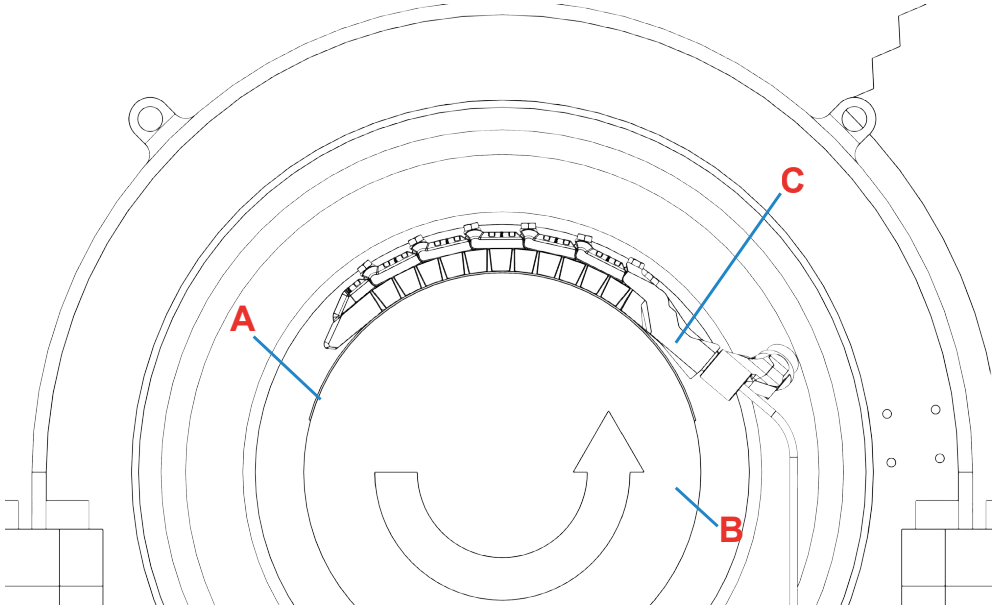



© Cutsforth 2026 | Cutsforth.com/Support

## 3.2.2. Attach the Connector Plate

The location of the connector plate **(A)** that mounts to the unit may vary, but it must be within reach of the 18" attachment arm pipe that will extend between the connector plate and the Shaft Grounding Assembly **(B)**.

1. Using the connector plate as a template, drill and tap four holes (5/16"-18 x 3/4" deep) for mounting to the unit.
2. Attach the connector plate to the mounting location using the provided 5/16"-18 x 3/4" hex bolts and Nordlock washers.

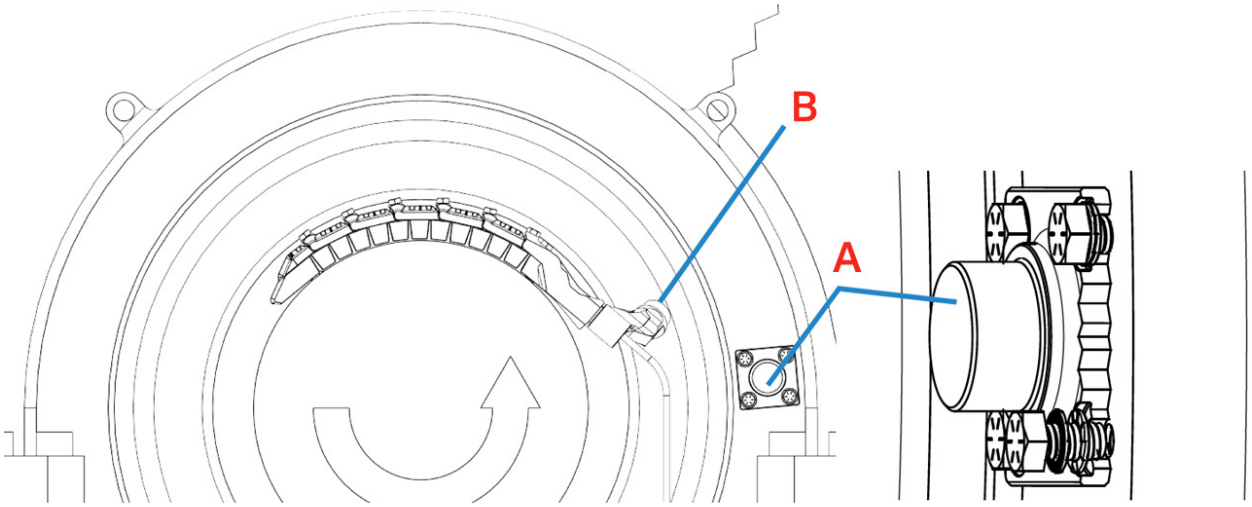



© Cutsforth 2026 | Cutsforth.com/Support

### 3.2.3. Insert the Elbow Assemblies

Insert one elbow assembly into the connector plate and one into the adapter located on the Shaft Grounding Assembly. Position the elbow assemblies **(A)** so they face each other, as shown in the following figure.

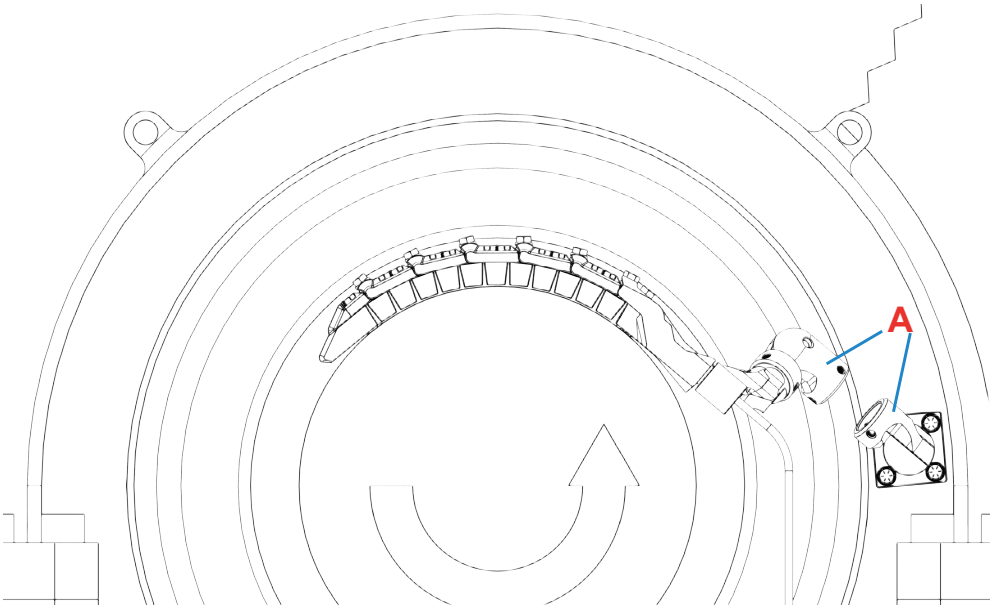



© Cutsforth 2026 | Cutsforth.com/Support

## 3.2.4. Insert the Attachment Arm

1. To determine the length of the attachment arm (steel tubing), measure the exact distance between the flanges on each elbow assembly and add 1.25" (3.18 cm) (the pipe will insert into each elbow assembly .625" (1.588 cm)).

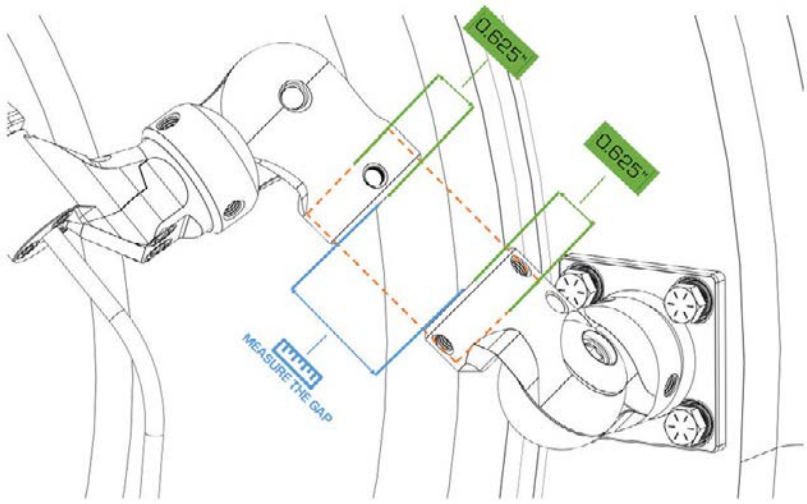


2. Cut the attachment arm pipe, ensuring that the cut is perpendicular to the length of the pipe, to the measured length and install it.

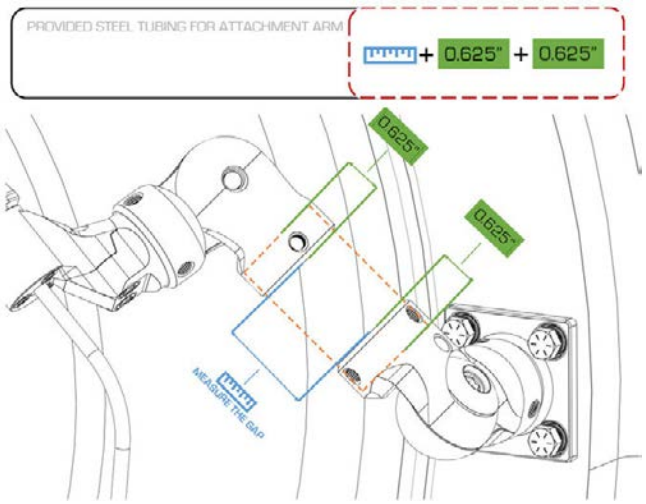



© Cutsforth 2026 | Cutsforth.com/Support

## 3.2.5. Secure Position and Remove the Attachment Arm

1. Using a 1/4" hex key wrench, tighten, but do not torque, the two SGA-to-Attachment Arm bolts **(A)**.
2. Using a 3/16" hex key wrench, tighten, but do not torque, the three bolts on the SGA ball joint **(B)**. Tighten each bolt in small increments, alternating from bolt to bolt until all three are secure. Fully tightening one bolt before beginning the others may result in unintended misalignment of the rope guide.

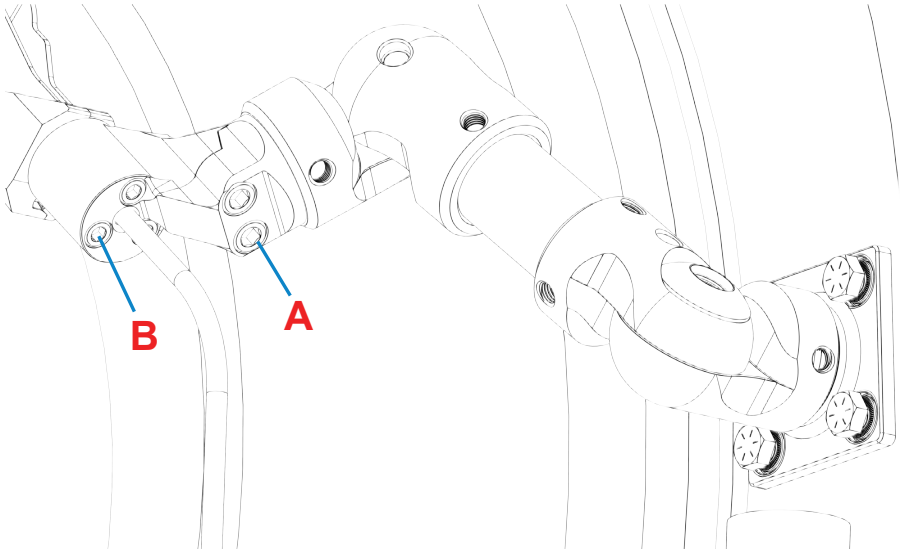


3. Using a 5/32" hex key wrench, tighten, but do not torque, the elbow-to-pipe and adapter fasteners **(C)**.
4. Using a 5/16" hex key wrench, tighten, but do not torque, the center pivot fastener **(D)** of each elbow.
5. Do not yet tighten the pivot set screw **(E)** between the two halves of the elbows.

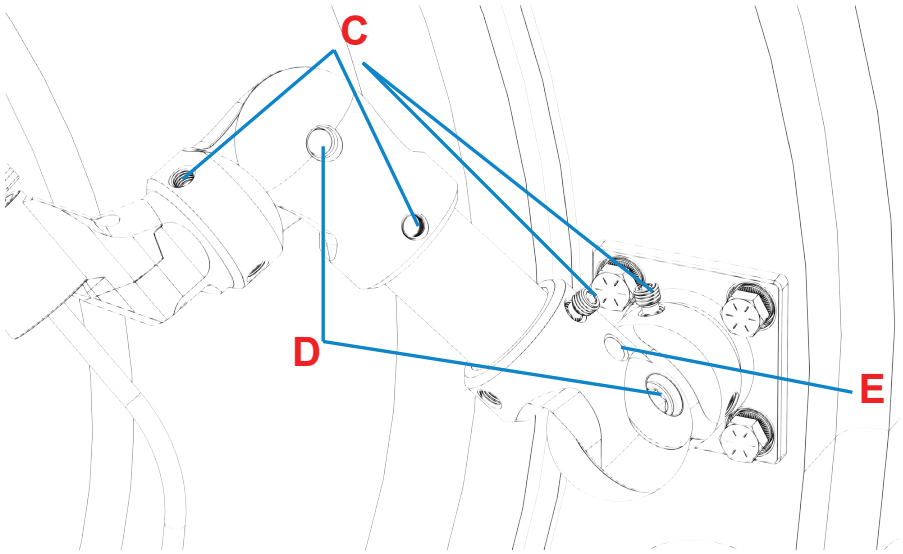



© Cutsforth 2026 | Cutsforth.com/Support

6. Remove the four hex bolts from the connector plate **(F)** and the two bolts from the attachment arm adapter **(A)** connecting to the rope guide.
7. Carefully remove the attachment arm assembly, while taking care not to disturb the elbow assemblies, as this will cause misalignment.

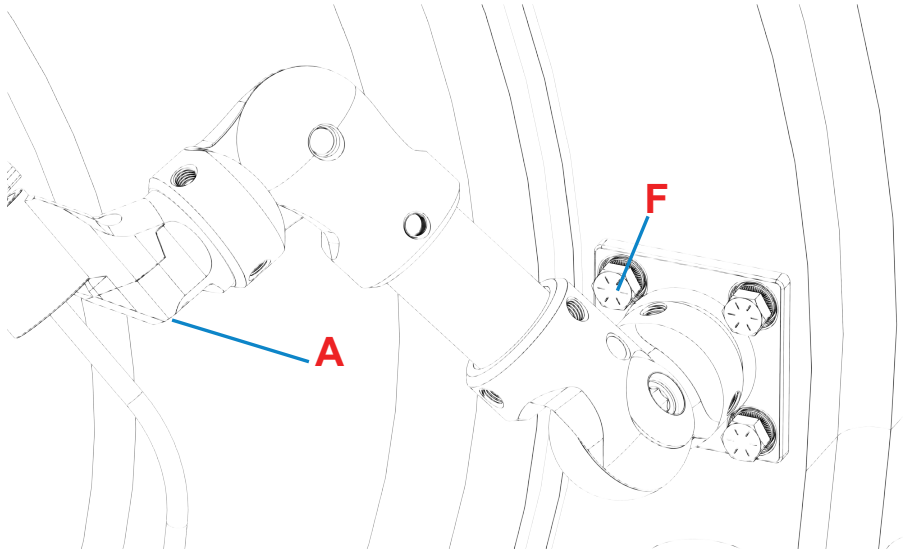



© Cutsforth 2026 | Cutsforth.com/Support

## 3.2.6. Drill Holes for Set Screws

Drill holes for set screws one at a time using the custom bushing and drill bit **(A)** provided with the Shaft Grounding equipment.

1. Begin with the pivot set screws **(B)**, making sure that each set screw is fully seated to lock in the position, but not torqued, before moving on to the next hole.
2. Next, move on to the elbow-to-pipe and adapter fasteners **(C)**, making sure that each set screw is fully seated to lock in position, but not torqued, before moving on to the next hole.
3. If needed, elbow pivots may be rotated by loosening the large center pivot bolt **(D)** as long as the pivot set screw hole **(B)** was previously drilled so that the elbow position will be maintained.

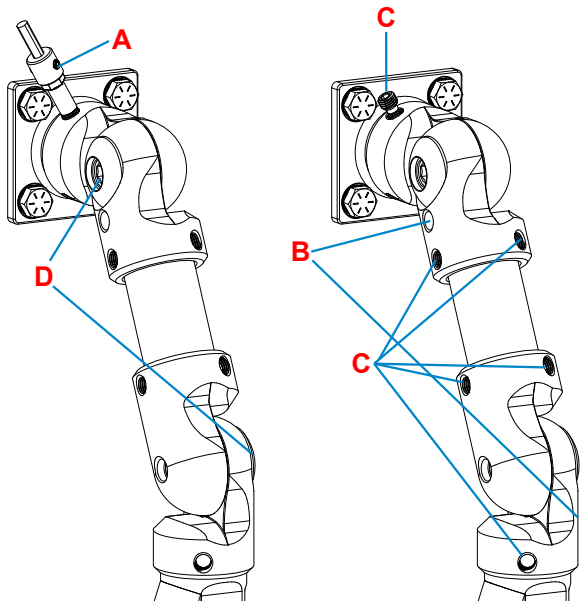



© Cutsforth 2026 | Cutsforth.com/Support

### 3.2.6.1. Perform Final Torques

Perform final torques on Attachment Arm fasteners:

1. Torque the elbow-to-pipe and adapter fasteners **(C)** to 150 in-lbs. If needed, elbow pivots may be rotated by loosening the large center pivot bolt **(D)** as long as the pivot set screw hole **(B)** was previously drilled so that the elbow position will be maintained.
2. Torque the elbow's center pivot bolt **(D)** to 70 ft-lbs. If the elbow pivot was previously loosened and rotated, check the elbow orientation with the pivot set screw **(B)**, but do not tighten the set screw until the center pivot bolt has been torqued. (**Note:** Once the elbow's center pivot bolt is torqued, it will be difficult to loosen the joint; be sure of the position).
3. Torque the elbow's pivot set screws **(B)** to 150 in-lbs.

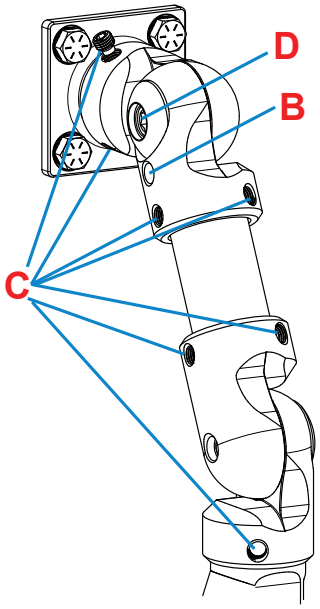



© Cutsforth 2026 | Cutsforth.com/Support

## 3.2.7. Position the Shaft Grounding Assembly

1. After assembling the attachment arm, place the Shaft Grounding Assembly back onto the shaft, over the rope guide spacer.
2. Connect the attachment arm to the Shaft Grounding Assembly by tightening the two screws **(A)** shown in the following figure. Torque to 300 in-lbs (or 25 ft-lbs).

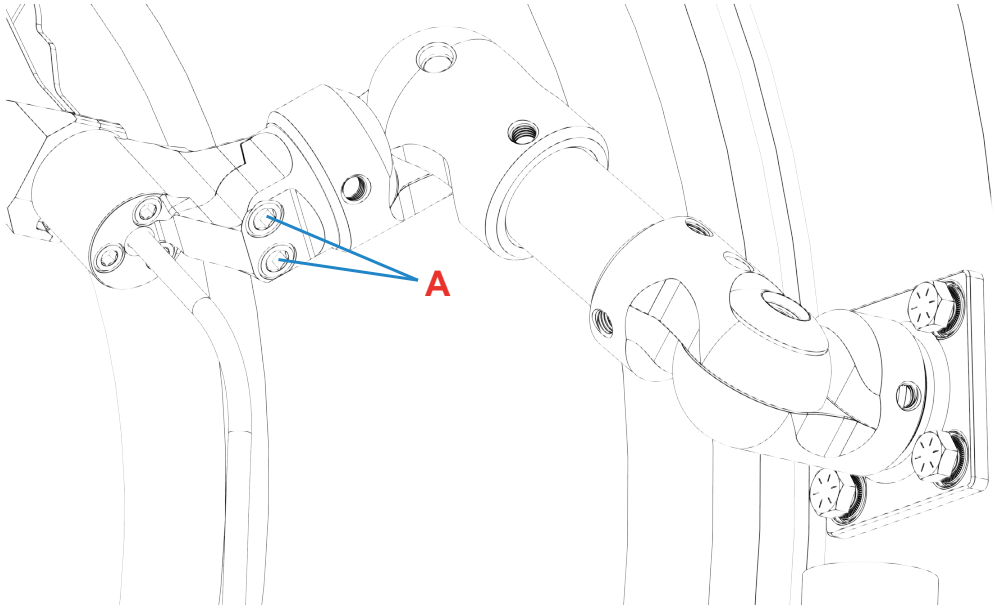



© Cutsforth 2026 | Cutsforth.com/Support

## 3.2.8. Secure the Shaft Grounding Assembly

1. Check the gap between the shaft and the contact points on the rope guide to make sure there are no misalignments.
2. Torque all four of the 5/16"-18 x 3/4" hex bolts **(A)** with Nordlock washers to 240 in-lbs.

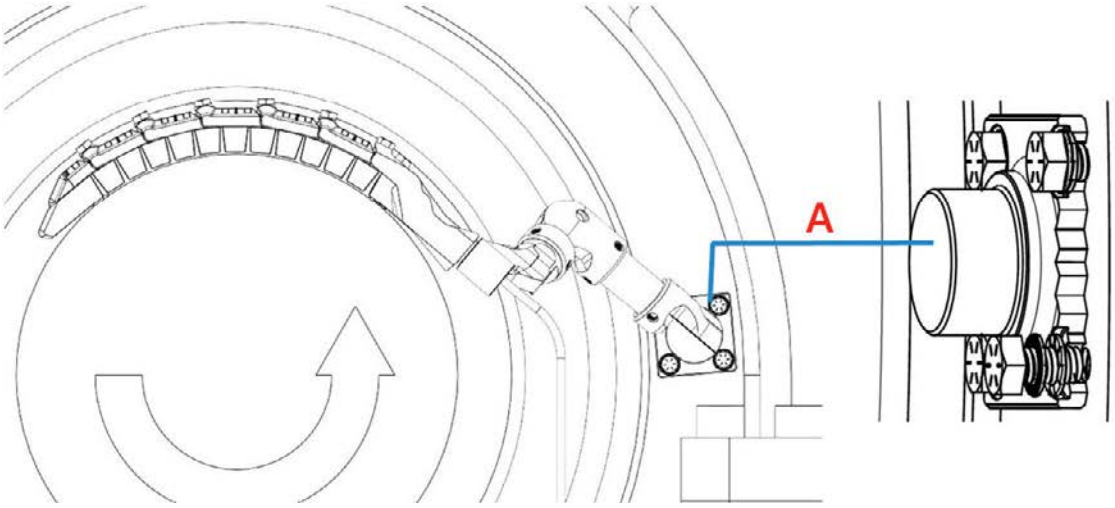


3. Make any needed fine-tuning adjustments to the orientation to the Shaft Grounding Assembly before locking the rope guide ball and socket joint in place by tightening the three 1/4"-28 socket head cap screws **(B)** shown in the following figure. Tighten these bolts by first getting each one snug, then torquing each bolt to 110 in-lbs. Note that the joint gives 10 degrees of final fine adjustment to the shaft in any direction.

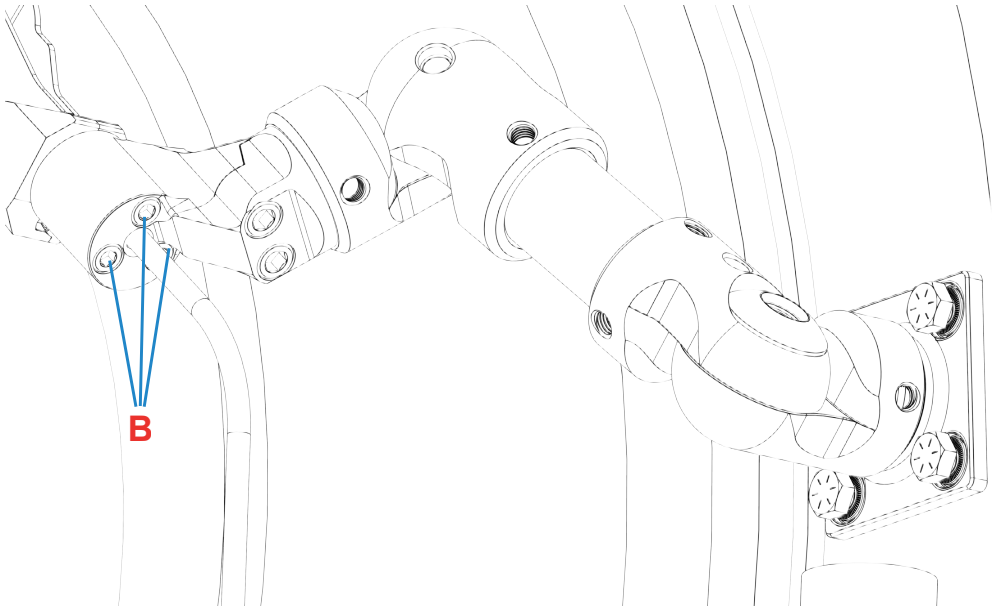



© Cutsforth 2026 | Cutsforth.com/Support

## 3.3. Securing the Rope Guide

1. Adjust each rope guide section so that the contact points **(A)** are touching the 1/16" rope guide spacer.
2. Tighten all the 5/16"-18 x 5/8" bolts (hex head or IP40 Torx button head) **(B)** on the rope guide starting closest to the attachment arm side of the assembly, and then work around from there. Torque all the bolts to 220 in-lbs.
3. When all rope guide bolts are torqued and the rope guide is secured, remove the rope guide spacer.

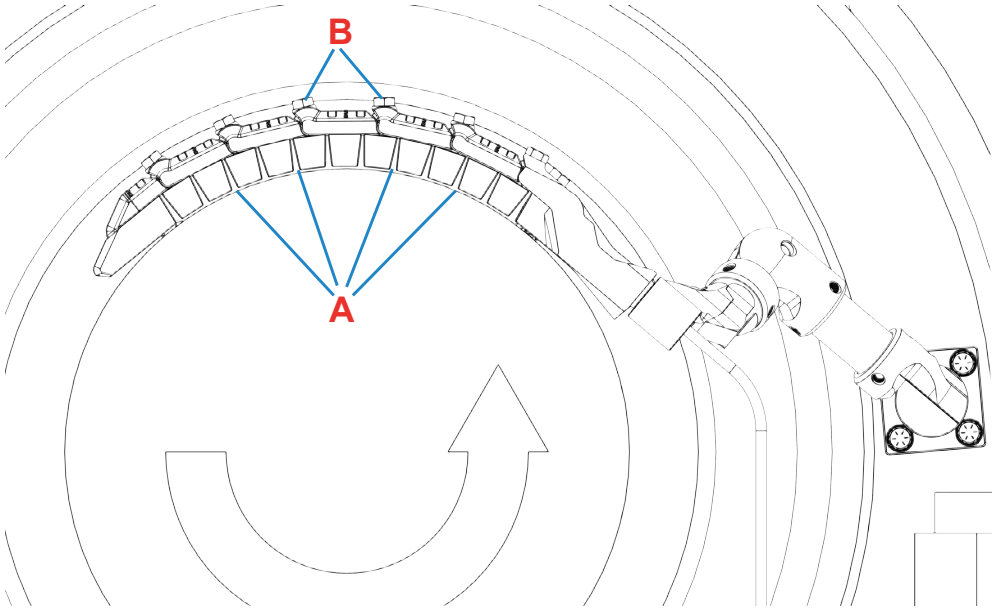


## 3.4. Mounting the Junction Box

1. Drill and tap two 5/16"-18 x 1/2" deep holes into a secure structure within 4 ft of the Shaft Grounding Assembly **(A)**.
2. Use the supplied 5/16"-18 bolts and Nordlock washers to secure the Junction Box **(B)** in place. Torque to 240 in-lbs.

If drilling and tapping is not desired, it is acceptable install the Junction Box using an alternative mounting structure, such as Unitstrut.


© Cutsforth 2026 | Cutsforth.com/Support

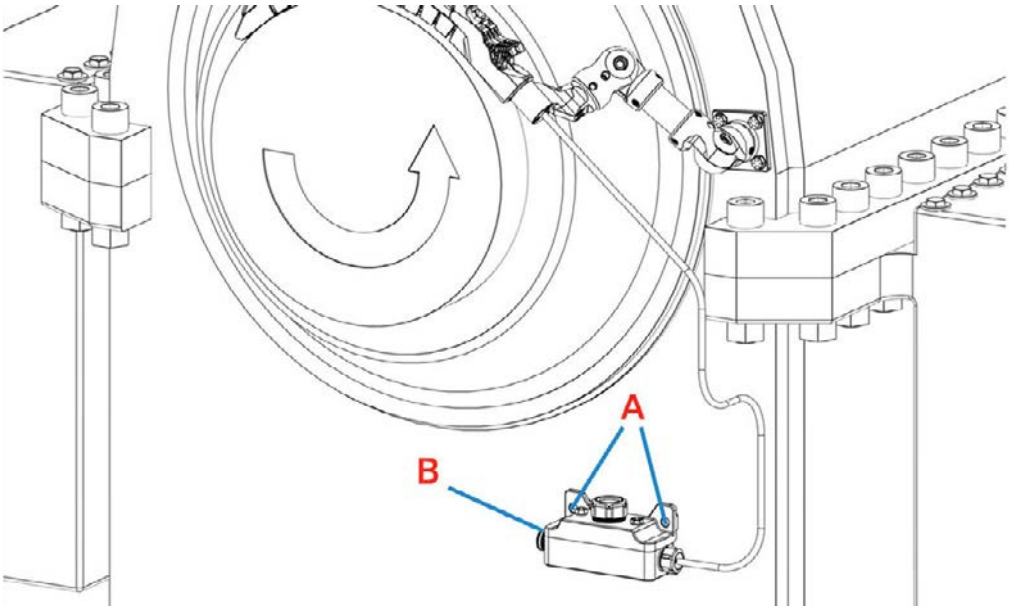


## 3.5. Grounding Cable Termination

Drill and tap a 5/16"-18 x 1/2" deep (1.27 cm) hole in a suitable grounding location on the outside of the unit case **(A)** to attach the grounding ring terminal **(B)**. The metal surface to which the grounding ring terminal will be mated must be smooth and free of any paint, rust, oil, or other contaminants that may inhibit the electrical connection. The maximum wire length for the ground run from the Shaft Grounding Assembly to the unit case ground location is 5 ft (1.5 m).

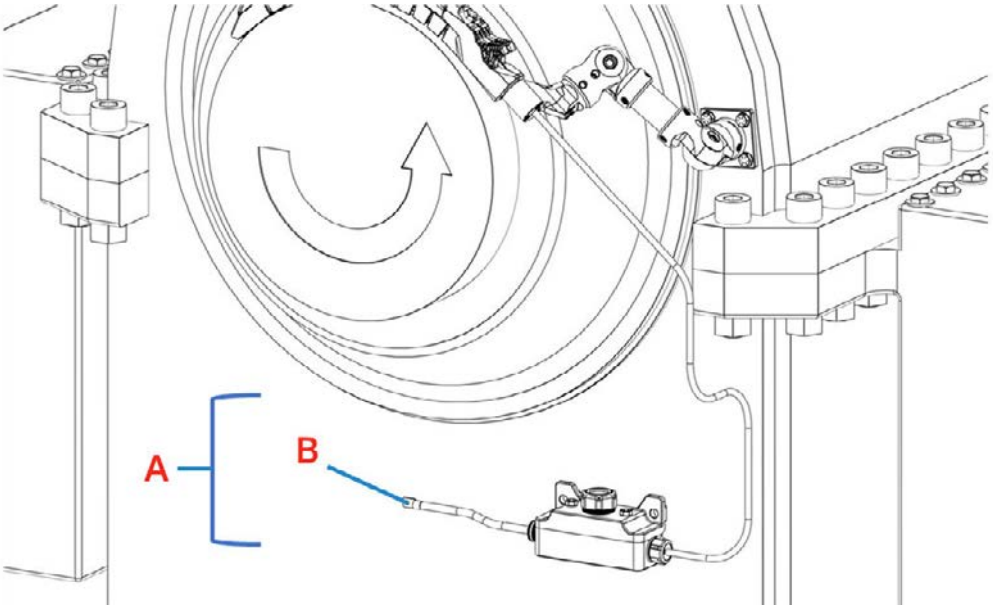



© Cutsforth 2026 | Cutsforth.com/Support

## 3.6. Install the Signal Cables

1. Connect the signal cables to the Junction Box by plugging the 20-pin connector into the opening in the lid of the Junction Box. Make sure the connector is fully inserted.
2. Route the signal cables **(A)** to the intended monitoring system location through conduit (provided by the electrical contractor).

   Refer to your specific monitoring system operations manual for further instructions on wiring and mounting the monitoring system.

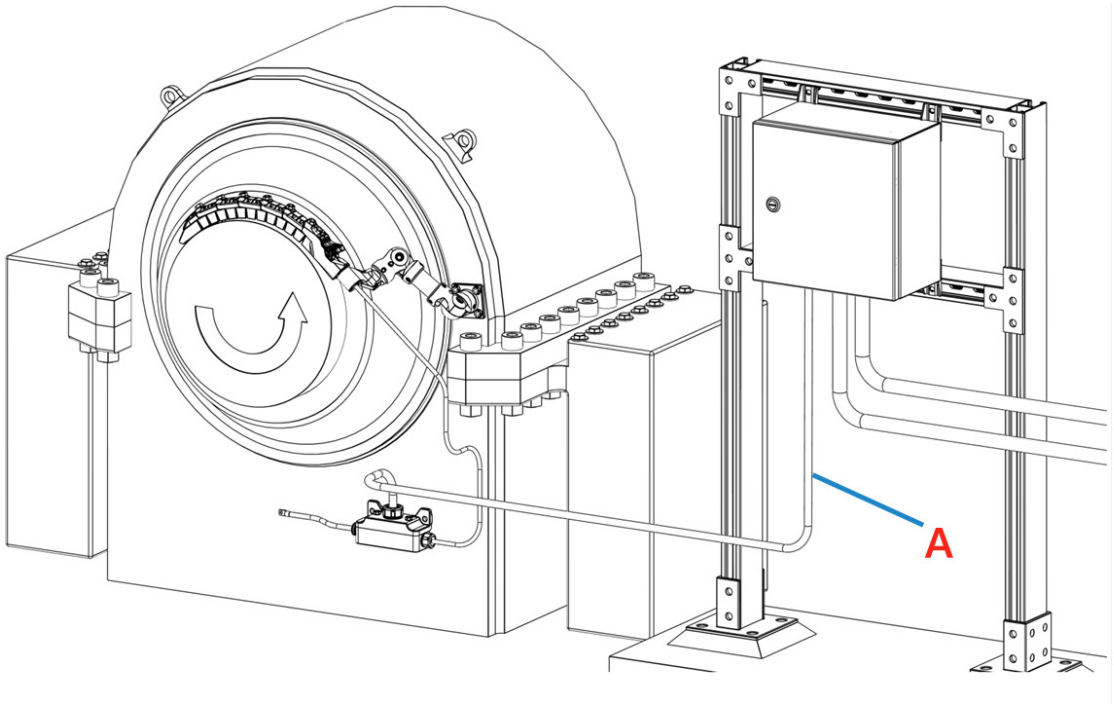



© Cutsforth 2026 | Cutsforth.com/Support

# 4. Shaft Contact Assembly Installation

In addition to the Shaft Grounding Assembly, Cutsforth offers an optional secondary shaft assembly, the Shaft Contact Assembly (SCA), that is designed to be installed at the exciter end of the generator to provide a shaft voltage measurement at that location.

The Shaft Contact Assembly is designed for voltage measuring purposes only and does not provide an additional ground to the generator shaft. The Shaft Contact Assembly follows the same installation procedure as the Shaft Grounding Assembly. Refer to the Shaft Grounding Assembly installation instructions previously detailed in this manual for information on installing the Shaft Contact Assembly.

Below is an example installation of the Shaft Contact Assembly **(A)**. The installation location between the collector rings **(B)** and generator **(C)**, as detailed below, is a common configuration, but individual installations may vary.

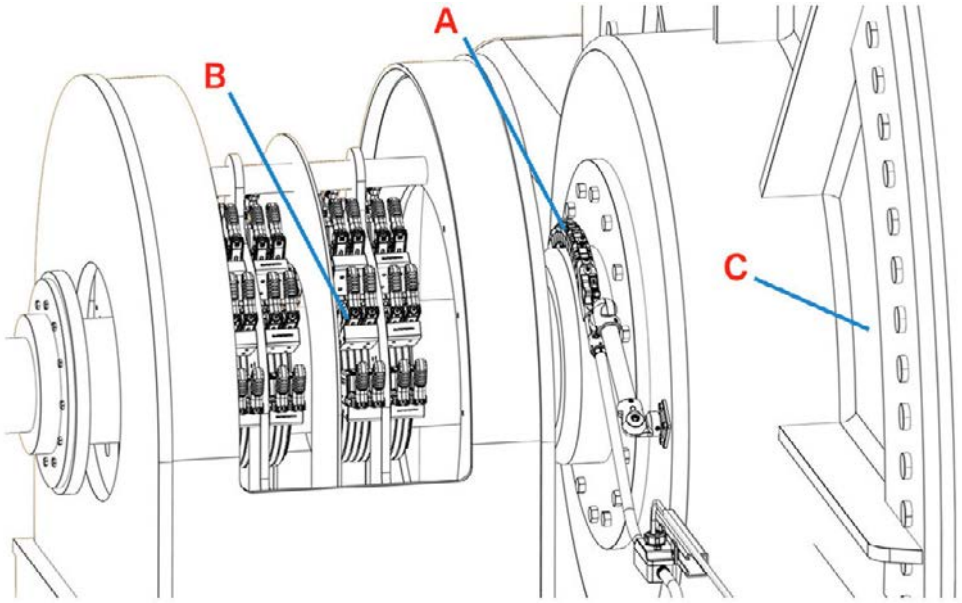



© Cutsforth 2026 | Cutsforth.com/Support

# 5. Installing and Removing the Shaft Grounding and Contact Ropes

This topic describes the installation and removal of the Shaft Grounding and Contact Ropes.

NOTE:

When changing ropes at the Shaft Grounding Assembly online, always have one rope installed in the Rope Guide Assembly to maintain proper ground. Cutsforth recommends that workers **do not** change Shaft Contact Assembly (SCA) meter ropes while the generator is energized and/or operational.


© Cutsforth 2026 | Cutsforth.com/Support

## 5.1. Inserting a Rope

1. Insert the rope into the rope guide **(A)**, as shown in the following figure.

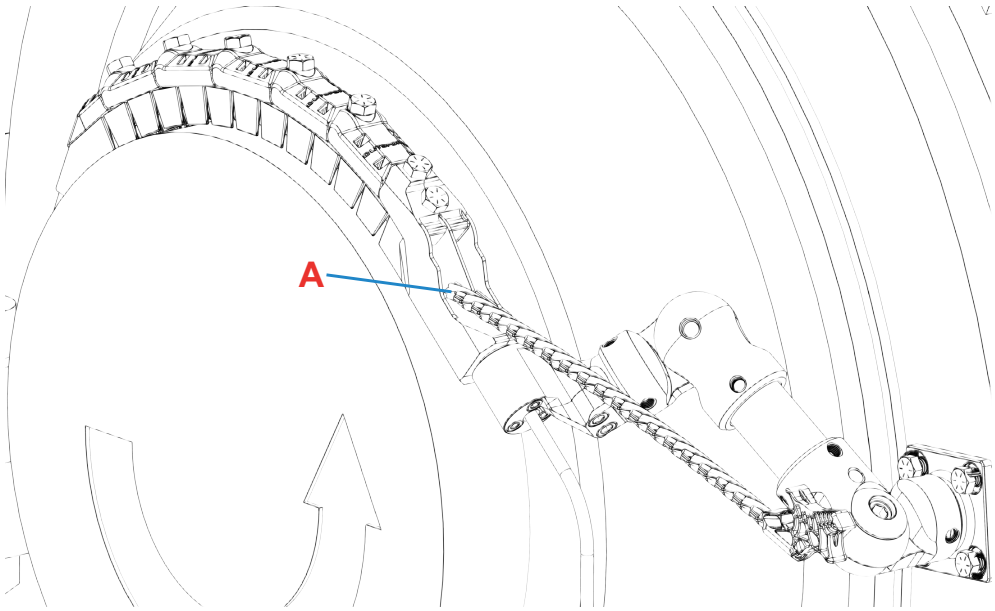


2. With the rope fully inserted into the rope guide, push down on the rope grip **(B)** until is it fully seated, ensuring that the plastic heel of the rope grip is in contact with the metal frame of the SGA **(C)**.

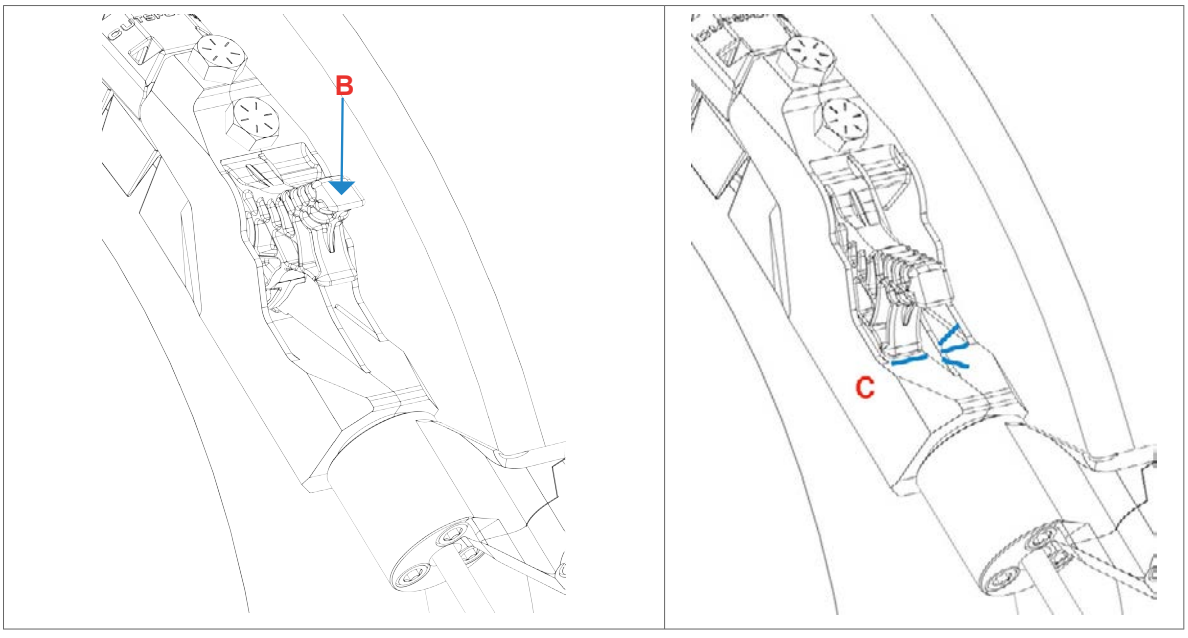



© Cutsforth 2026 | Cutsforth.com/Support

## 5.2. Removing a Rope

1. Lift the rope grip by the handle tab **(A)** and then pull the rope away from the shaft **(B)**.

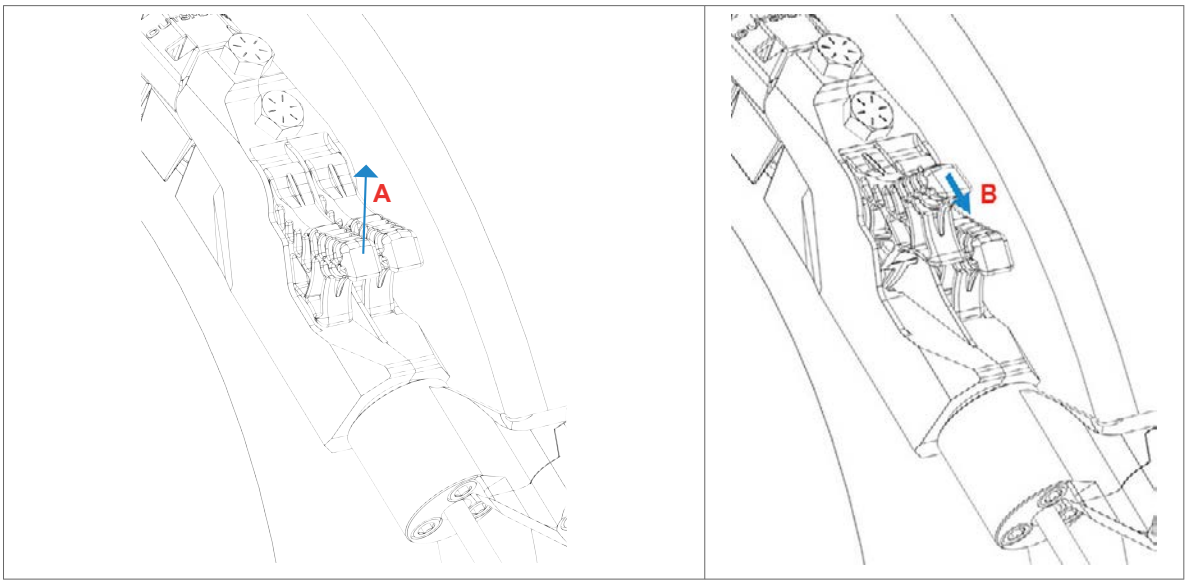


2. Continue pulling the rope away from the Rope Guide Assembly **(C)**, while maintaining control of the rope until it has been completely removed.

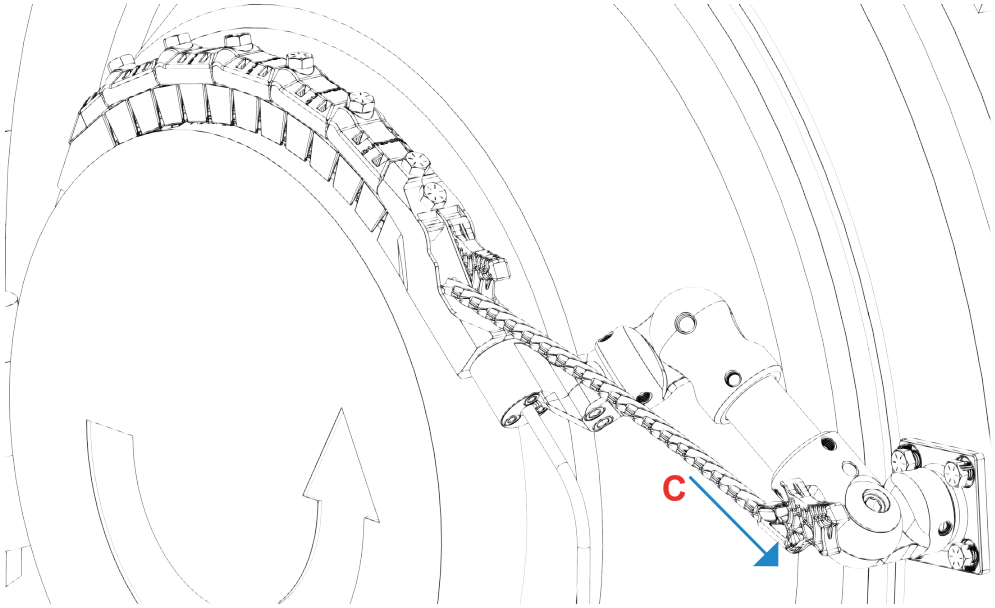



© Cutsforth 2026 | Cutsforth.com/Support

# 6. Disassembling the Shaft Grounding Assembly

Cutsforth recognizes that it may be required to remove the Shaft Grounding Assembly and/or Shaft Contact Assembly during outages or other maintenance activities. The following instructions are designed to facilitate a simple and smooth disassembly process.

## 6.1. Disconnect the Signal Cables

1. Disconnect the conduit fitting from the Junction Box **(A)**.
2. Disconnect the signal cables from the Junction Box **(B)**.

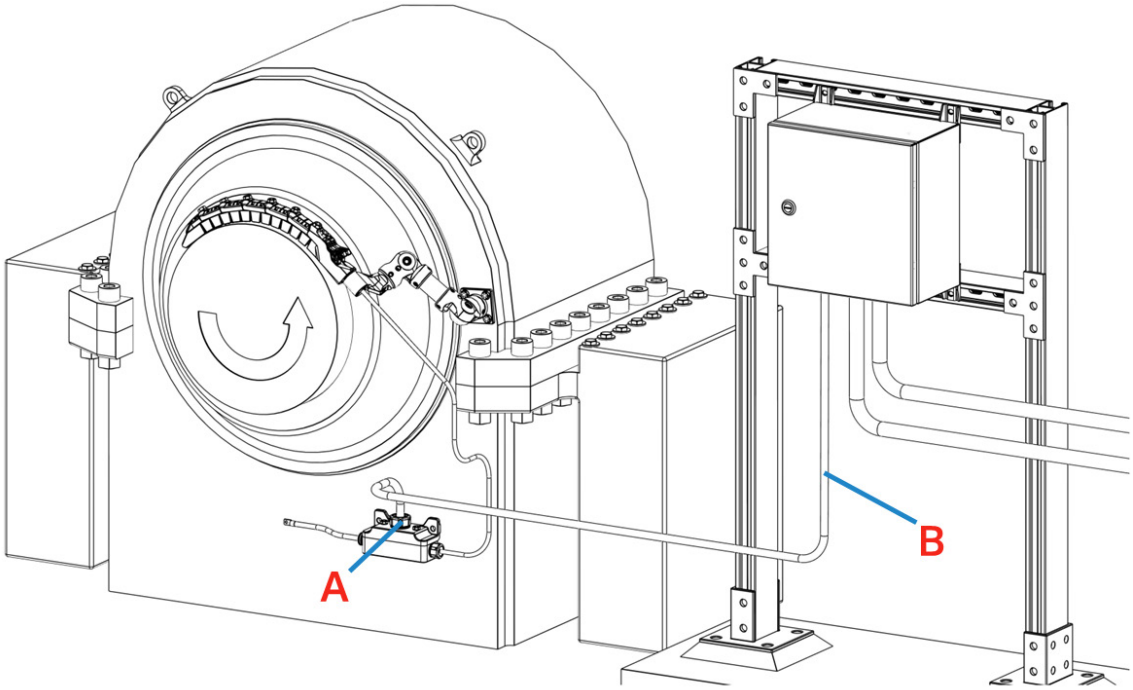



© Cutsforth 2026 | Cutsforth.com/Support

## 6.2. Disconnect the Ground Cable from the Unit Case

Remove the 5/16"-18 hex grounding bolt from the unit case to disconnect the ground cable **(A)**.

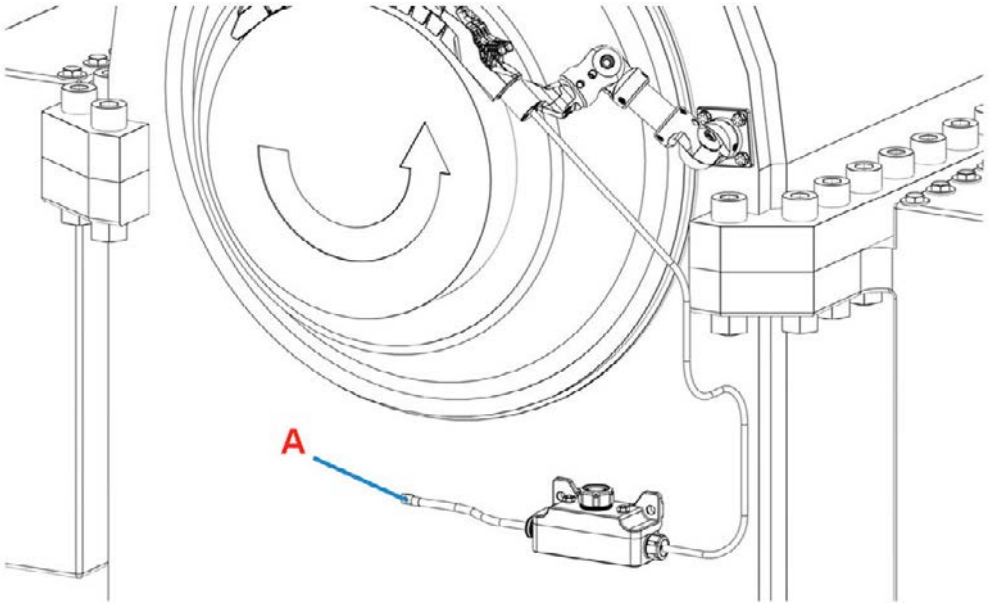


## 6.3. Unmount the Junction Box Assembly

Remove the two 5/16"-18 hex bolts **(A)** securing the Junction Box to the mounting structure.

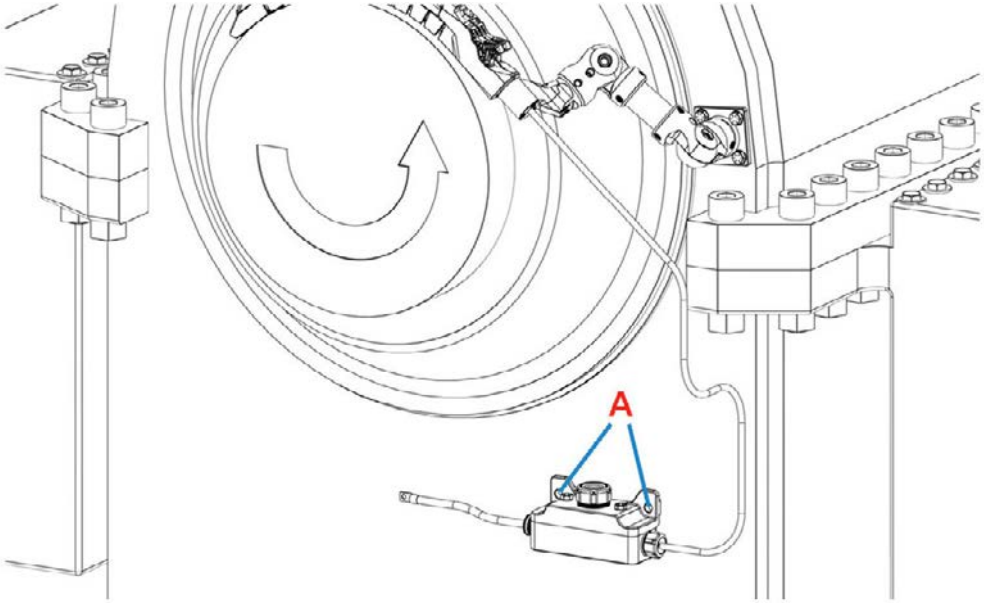



© Cutsforth 2026 | Cutsforth.com/Support

## 6.4. Remove the Shaft Grounding Assembly

1. Remove (only) the four 5/16"-18 hex bolts **(A)** securing the attachment arm to the unit.
2. Remove the Shaft Grounding Assembly, along with the attached cabling, Junction Box, and place it in a safe location for storage.

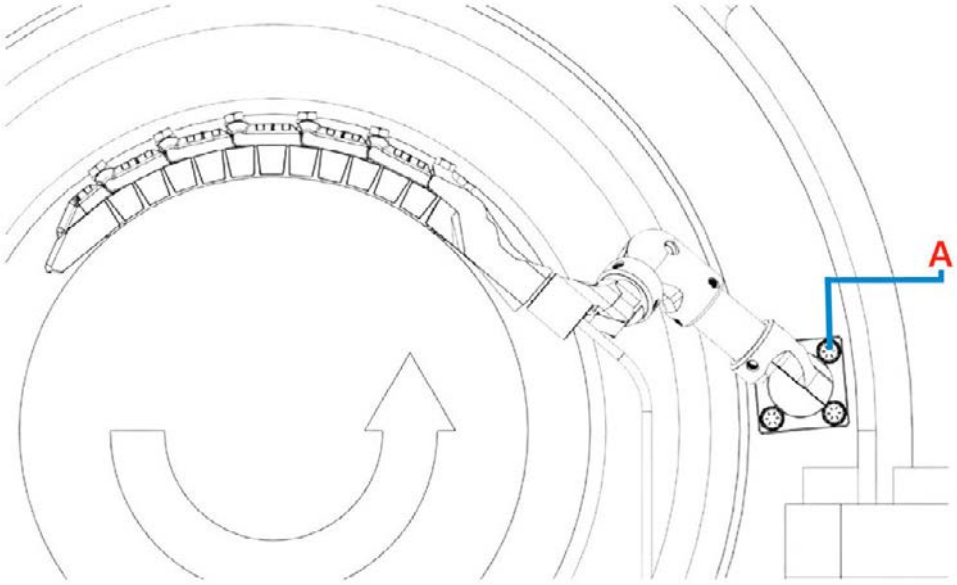



© Cutsforth 2026 | Cutsforth.com/Support

# 7. Inspecting the Shaft Grounding Assembly

To ensure that the Shaft Grounding Assembly is in proper working condition, make the following inspections frequently:

- Check for any cracking or breakage of components.
- When installing or removing the rope, check the “snap in” pressure.
- Confirm that the rope guide is not contacting the shaft. There should be approximately 1/16" (1.6 mm) between rope guide and the face of the shaft.
- Inspect the integrity of the rope guide and attachment arms.
- Inspect the shaft condition for any visible signs of wear, pitting, grooving, and contaminants.
- Inspect ropes for wear and contaminants.
- Inspect the electrical contacts on grounding ropes and in their corresponding slots in the Shaft Grounding Assembly for any wear or contaminants.
- Inspect clearances and tightness of SGA/SCA arms to ensure there is no loosening over time, which could result in rubs and/or interference from thermal expansion.


© Cutsforth 2026 | Cutsforth.com/Support

# 8. Glossary

| | |
|---|---|
| attenuation | The reduction of the amplitude of a signal due to excessive cable length. |
| AWG | American Wire Gauge |
| FEP | Fluorinated Ethylene Propylene (high-temperature cable jacket material) |
| ground conductor | 8 AWG, green ground conductor that carries the shaft current to the unit case ground location. |
| ground current | The electrical current between the shaft and the unit case ground through the ground conductor. |
| ground rope | The left rope in the Shaft Grounding Assembly, which provides the primary path to unit case ground through the 8AWG ground conductor. |
| impedance | The resistance to change in the current of a circuit. |
| LOTO | Lockout/Tagout |
| meter rope | The right rope in the Shaft Grounding Assembly which provides a shaft contact point at which shaft voltage readings are taken. |
| Shaft Contact Assembly (SCA) | A Cutsforth product designed to provide a secondary shaft contact point at which shaft voltage can be measured. |
| Shaft Grounding Assembly (SGA) | A Cutsforth product designed to provide a best-in-class ground connection, as well as a shaft contact point at which shaft voltage can be measured. |
| shaft voltage | The voltage potential between the shaft and the unit case ground as measured by the metering rope. |
| signal cable | Shielded cable that carries the voltage signals from the SGA and the SCA to the monitoring system. |
| unit | The equipment monitored by the Cutsforth monitoring system. |
| unit case ground | The lower half of the turbine case, generator case, or coupler case near the Shaft Grounding Assembly to which the shaft can be grounded. |


© Cutsforth 2026 | Cutsforth.com/Support