CUTSFORTH

Operations Manual
EZDP-2127 Rev G

Shaft Ground Monitoring:
Assurance – Series 2



THE INFORMATION CONTAINED HEREIN IS CONFIDENTIAL AND PROPRIETARY TO CUTSFORTH AND SHALL NOT BE REPRODUCED OR DISCLOSED IN WHOLE OR PART FOR ANY DESIGN OR MANUFACTURE WITHOUT THE WRITTEN AUTHORIZATION OF CUTSFORTH.

Table of Contents

Legal Information 1
Limited Warranty 1
Copyright 2
Trademarks 2
U.S. Government Use and Rights 2
Patents 3
Safety Information 4
1. The Cutsforth Assurance Monitoring System 8
1.1. Key Specifications 8
1.2. Proper Assurance Monitoring System Installation Required 8
1.3. Additional Resources 8
1.4. Technical Specifications 9
1.4.1. Monitoring System Enclosure 10
1.4.2. AC Power Supply Requirements 12
1.4.3. Approved Manufacturing Locations 12
1.4.4. Product Certifications 12
1.4.5. Environmental Requirements 13
2. Installation 14
2.1. Inside the Box 14
2.2. Installation Overview 15
2.2.1. Conduit and Strut Channel Recommendations 15
2.2.2. Recommended Strut Rack Design 16
2.3. Enclosure Placement 17
2.4. Routing the Signal Cables from the Shaft Grounding Assembly 18
2.5. Running Plant Power and Data Connections 19
2.6. Terminating Enclosure Case Ground Connection 20
3. System Operation and Troubleshooting 21
3.1. Shaft Grounding Assembly 21
3.2. OLED Display 21
3.3. Monitoring Test Points 22
3.3.1. Ground Current Test Points 23
3.3.2. Shaft Voltage Test Points 23
3.3.3. Wear Indicator Test Points 24
3.4. Advanced Troubleshooting 25
3.4.1. Possible Grounding Fault Indications 25
3.4.2. Grounding Current Steps Down and Shaft Voltage Steps Up 26
3.4.3. Average and/or Zero-to-Peak Grounding Current and Shaft Voltages Step Down 26
3.4.4. Average and/or Zero-to-Peak Shaft Voltages and Grounding Currents Step Up 26
3.4.5. Average and/or Zero-to-Peak Shaft Voltages or Currents Trending Up or Down Over Time 26
4. Modbus Communication API 27
4.1. Modbus Protocol Features 27
4.2. Termination Resistance 28
4.3. Address Declarations 28
4.4. Rope Status Channel Interpretation 29

© Cutsforth 2026 | Cutsforth.com/Support

5. 4–20 mA Lines 30
5.1. DCS Programming: Interpreting Output Values 30
5.1.1. Channel 0: Shaft Voltage RMS 30
5.1.2. Channel 1: Shaft Voltage 0–Peak 30
5.1.3. Channel 2: Shaft Voltage DC 31
5.1.4. Channel 3: Ground Current RMS 31
5.1.5. Channel 4: Ground Current 0–Peak 31
5.1.6. Channel 5: Ground Current DC 31
5.1.7. Channel 6: Rope Status (Wear Indicator) 32
6. Calibration and Preventive Maintenance 33
6.1. Visually Inspect and Clean Assurance Monitoring System Electrical Components 33
6.2. Check Current Sensor, Voltage Sensor, and System Performance 33
7. Reference Information 34
7.1. How Average and Peak Values are Calculated 34
7.2. Related Documents 34
8. Glossary 35

© Cutsforth 2026 | Cutsforth.com/Support

Legal Information

Limited Warranty

This document is provided 'as is' and is subject to being changed, without notice, in future editions. Cutsforth reviews this document carefully for technical accuracy; however, CUTSFORTH MAKES NO EXPRESS OR IMPLIED WARRANTY AS TO THE ACCURACY OF THE INFORMATION WITHIN THIS MANUAL AS IT RELATES TO ANY SPECIFIC INSTALLATION. THE CUSTOMER IS RESPONSIBLE FOR VERIFYING INSTALLATION AND OPERATING CONDITIONS AT EACH INSTALLATION LOCATION AND FOR EACH ASSET AND EQUIPMENT TYPE ON WHICH THE PRODUCTS ARE INSTALLED OR USED. Cutsforth warrants that its hardware products will be free of defects in materials and workmanship that cause the product to fail to substantially conform to the applicable Cutsforth published specifications for one (1) year from the date of invoice.

For a period of ninety (90) days from the date of invoice, Cutsforth warrants that its software products will perform substantially in accordance with the applicable documentation provided with the software. Software or services provided on a subscription, hosted, or software-as-a-service basis are governed by the applicable license, subscription, or services agreement, and the warranty terms of that agreement control for those offerings. If Cutsforth receives notice of a defect or non-conformance during the applicable warranty period, Cutsforth will, in its discretion: (i) repair or replace the affected product, or (ii) refund the fees paid for the affected product. Repaired or replaced hardware will be warranted for the remainder of the original warranty period or ninety (90) days, whichever is longer. If Cutsforth elects to repair or replace the product, Cutsforth may use new or refurbished parts or products that are equivalent to new in performance and reliability and are at least functionally equivalent to the original part or product. You must obtain an RMA number from Cutsforth before returning any product to Cutsforth. Cutsforth reserves the right to charge a fee for examining and testing hardware not covered by the Limited Warranty.

This Limited Warranty does not apply if the defect of the product resulted from improper or inadequate maintenance, installation, repair, or calibration performed by a party other than Cutsforth; unauthorized modification; improper environment; use of an improper hardware or software key; improper use or operation outside of the specification for the product; improper voltages; accident, abuse, or neglect; or a hazard such as lightning, flood, or other act of nature.

If Customer and Cutsforth have entered into a separate signed written agreement governing the products or services, the terms of that agreement control to the extent they conflict with this statement.

THE REMEDIES SET FORTH ABOVE ARE EXCLUSIVE AND THE CUSTOMER'S SOLE REMEDIES, AND SHALL APPLY EVEN IF SUCH REMEDIES FAIL OF THEIR ESSENTIAL PURPOSE.

WARNING REGARDING USE OF CUTSFORTH PRODUCTS: CUSTOMER IS ULTIMATELY RESPONSIBLE FOR VERIFYING AND VALIDATING THE SUITABILITY AND RELIABILITY OF THE PRODUCTS WHENEVER THE PRODUCTS ARE INCORPORATED IN THEIR SYSTEM OR APPLICATION, INCLUDING THE APPROPRIATE DESIGN, PROCESS, AND SAFETY LEVEL OF SUCH SYSTEM OR APPLICATION. PRODUCTS ARE NOT DESIGNED, MANUFACTURED, OR TESTED FOR USE IN LIFE OR SAFETY CRITICAL SYSTEMS, OR ANY OTHER APPLICATION IN WHICH THE FAILURE OF THE PRODUCT

© Cutsforth 2026 | Cutsforth.com/Support

OR SERVICE COULD LEAD TO DEATH, PERSONAL INJURY, SEVERE PROPERTY DAMAGE OR ENVIRONMENTAL HARM (COLLECTIVELY, "HIGH-RISK USES"). CUTSFORTH PRODUCTS ARE MONITORING, MEASUREMENT, AND DIAGNOSTIC TOOLS; THEY ARE NOT PROTECTIVE DEVICES OR SAFETY SYSTEMS, AND THEY ARE NOT A SUBSTITUTE FOR CUSTOMER'S OWN INSPECTION, MAINTENANCE, AND ENGINEERING JUDGMENT. CUTSFORTH DOES NOT WARRANT THAT THE PRODUCTS WILL DETECT, PREDICT, OR PREVENT ANY PARTICULAR FAULT, CONDITION, OR FAILURE. FURTHER, PRUDENT STEPS MUST BE TAKEN TO PROTECT AGAINST FAILURES, INCLUDING PROVIDING BACK-UP AND SHUT-DOWN MECHANISMS. CUTSFORTH EXPRESSLY DISCLAIMS ANY EXPRESS OR IMPLIED WARRANTY OF FITNESS OF THE PRODUCTS OR SERVICES FOR HIGH-RISK USES.

TO THE MAXIMUM EXTENT PERMITTED BY APPLICABLE LAW, CUTSFORTH DOES NOT WARRANT, GUARANTEE, OR MAKE ANY REPRESENTATIONS REGARDING THE USE OF OR THE RESULTS OF THE USE OF THE PRODUCTS — INCLUDING ANY DATA, MEASUREMENTS, ALERTS, ANALYTICS, OR REPORTS GENERATED BY THE PRODUCTS — IN TERMS OF CORRECTNESS, ACCURACY, RELIABILITY, COMPLETENESS, OR OTHERWISE. CUTSFORTH DOES NOT WARRANT THAT THE OPERATION OF THE PRODUCTS WILL BE UNINTERRUPTED OR ERROR FREE. INCIDENTAL AND CONSEQUENTIAL DAMAGES, INCLUDING LOSS OF USE, LOSS OF DATA, AND LOSS OF PROFITS, ARE SPECIFICALLY EXCLUDED FROM THIS WARRANTY; THE MAXIMUM VALUE OF A WARRANTY CLAIM CANNOT EXCEED THE ORIGINAL VALUE OF THE AFFECTED ASSEMBLY OR COMPONENT. SOME JURISDICTIONS DO NOT ALLOW THE EXCLUSION OR LIMITATION OF IMPLIED WARRANTIES OR OF INCIDENTAL OR CONSEQUENTIAL DAMAGES; IN THOSE JURISDICTIONS, THE ABOVE EXCLUSIONS AND LIMITATIONS APPLY TO THE MAXIMUM EXTENT PERMITTED BY LAW.

Copyright

Under copyright law, this publication may not be reproduced or transmitted in any form, electronic or mechanical, including photocopying, recording, storing in an information retrieval system, or translating, in whole or in part, without the prior written consent of Cutsforth. Cutsforth respects the intellectual property of others, and we ask our users to do the same. Cutsforth software is protected by copyright and other intellectual property laws. Cutsforth software is licensed, not sold, and may be installed and used only in accordance with the applicable license or subscription terms, including any restriction to the hardware or systems for which it was licensed. Reproduction of software or written materials is prohibited unless Customer has obtained a license for that express purpose.

Trademarks

Cutsforth and the Cutsforth logo are trademarks of Cutsforth, Inc. All other trademarks are the property of their respective owners.

U.S. Government Use and Rights

Cutsforth products are commercial products, and Cutsforth services are commercial services, as those terms are defined in FAR 2.101. Cutsforth hardware products, where offered without modification and sold in substantial quantities in the commercial marketplace, are commercially available off-the-shelf (COTS) items as defined in FAR 2.101. Cutsforth products were developed exclusively at private expense.

Cutsforth software is commercial computer software, and the accompanying documentation is commercial computer software documentation. If the software or documentation is acquired by or on

behalf of the U.S. Government or a U.S. Government prime contractor or subcontractor (at any tier), the Government's rights in the software and documentation are only those set forth in the applicable Cutsforth license or subscription agreement, in accordance with FAR 12.212 and DFARS 227.7202-1 through 227.7202-4, or the successor provisions thereto. Technical data provided with Cutsforth products is furnished with limited rights in accordance with DFARS 252.227-7015 where applicable.

Cutsforth products and hosted services are not authorized for the processing or storage of classified information. Unless expressly agreed by Cutsforth in a signed writing, Cutsforth products and hosted services are not intended or authorized for the processing or storage of Controlled Unclassified Information (CUI). Customer is responsible for ensuring that information provided to or generated within Cutsforth products and services complies with the information-security, export-control, and critical infrastructure information requirements applicable to Customer, including, where applicable, requirements governing CUI and Critical Energy/Electric Infrastructure Information (CEII).

Patents

Please send patent information requests to patents@cutsforth.com.

© Cutsforth 2026 | Cutsforth.com/Support

Safety Information

Safety Information [English]

Following is important safety information. For safe installation and operation of this equipment, be sure to read and understand all cautions and warnings.

Safety Conventions



NOTE:

Additional information.



ELECTRICAL DANGER

Indicates an action or specific equipment area that can result in personal injury or death from an electrical hazard if proper precautions are not taken.



CAUTION

Indicates a hazardous situation that, if not avoided, could result in minor or moderate injury or equipment damage.



WARNING

Indicates a hazardous situation that, if not avoided, could result in death or serious injury.



ROTATING PART CAUTION

Indicates possible injury from rotating parts.



DANGER

Indicates a hazardous situation that, if not avoided, will result in death or serious injury.

General Safety Instructions



ELECTRICAL DANGER

Only qualified personnel who recognize shock hazards and are familiar with the safety precautions required to avoid injury should work with Cutsforth products. Among the many considerations are the following:

- Avoid contact with energized circuits.
- Avoid contact with rotating parts.
- Never install any component that appears not to be functioning in a normal manner.
- Always ensure proper installation of the holder assembly and shaft grounding rope.

© Cutsforth 2026 | Cutsforth.com/Support



ELECTRICAL DANGER

Before working on the generator, de-energize, lock out, and tag out all power sources to the generator, shaft, and accessory devices. Electric shock and death may result due to failure to heed this warning.



ROTATING PART CAUTION

High-voltage and rotating parts can cause serious or fatal injury. Installation, operation, and maintenance of this product must be performed only by qualified personnel, in accordance with all applicable safety regulations and guidelines.



LIFTING EQUIPMENT

For configurations that weigh more than 18 kg (40 lbs.), please utilize team lifting techniques to lift and move the equipment, including lifting with the legs, and avoid twisting while moving the equipment.

© Cutsforth 2026 | Cutsforth.com/Support

Consignes de Sécurité [Français]

Les informations qui suivent sont essentielles afin d'assurer la sécurité de l'utilisateur lors de l'installation et de l'opération de l'équipement. Assurez-vous de bien lire et de comprendre tous les avertissements et mises en garde qui suivent.

Conventions de Sécurité



NOTE:

Informations supplémentaires.



RISQUES DE CHOC ÉLECTRIQUE

Indique que l'action ou la partie de l'équipement concernée peut mener à des blessures par électrisation ou à la mort par électrocution si les précautions adéquates ne sont pas prises.



MISE EN GARDE

Indique la présence d'une situation dangereuse qui, si elle n'est pas évitée, pourrait mener à des blessures mineures à modérées ou à des dommages matériels.



AVERTISSEMENT

Indique la présence d'une situation dangereuse qui, si elle n'est pas évitée, pourrait mener à des blessures sévères ou à la mort.



MISE EN GARDE : PIÈCE ROTATIVE

Indique la présence de pièces d'équipement rotatives pouvant causer des blessures.



DANGER

Indique la présence d'une situation dangereuse qui, si elle n'est pas évitée, pourrait mener à des blessures sévères ou à la mort.

Consignes de Sécurité Générales



RISQUES DE CHOC ÉLECTRIQUE

L'utilisation des produits Cutsforth n'est recommandée qu'aux professionnels qualifiés qui savent comment reconnaître la présence de risques de choc électrique ainsi que les consignes de sécurité à suivre pour éviter les blessures liées à ces risques. Lesdites consignes de sécurité incluent, sans s'y limiter :

- Éviter tout contact avec des circuits alimentés;
- Éviter tout contact avec des pièces d'équipement rotatives;
- Ne jamais installer de composante ne paraissant pas fonctionner normalement;
- Toujours s'assurer que la structure de soutien et le câble de terre de l'arbre de la génératrice sont correctement installés.

© Cutsforth 2026 | Cutsforth.com/Support



RISQUES DE CHOC ÉLECTRIQUE

Avant de travailler sur la génératrice, désalimentez, cadenassez et étiquetez toutes les sources d'énergies liées à la génératrice, à l'arbre et aux appareils accessoires. L'opérateur s'expose à des risques de chocs électriques pouvant causer la mort s'il ne tient pas compte de cet avertissment.



MISE EN GARDE : PIÈCE ROTATIVE

Les pièces d'équipement rotatives et sous haute tension peuvent causer des blessures sévères ou fatales. L'installation, l'opération et la manutention de ce produit ne doivent être faites que par des professionnels qualifiés et en respectant toutes les règles et consignes de sécurité applicables.



ÉQUIPEMENT DE LEVAGE

Pour les configurations pesant plus de 18 kg (40 lb), veuillez recourir à des techniques de levage en équipe pour soulever et déplacer l'équipement — notamment en sollicitant les jambes — et évitez toute torsion du corps lors du déplacement.

© Cutsforth 2026 | Cutsforth.com/Support

1. The Cutsforth Assurance Monitoring System

Cutsforth's Assurance Monitoring System measures grounding current and shaft voltage at the generator drive-end bearing and provides a unit shaft ground connection. The system features a local digital readout that displays live shaft voltage, ground current, and rope status data, as well as manual test points within the monitoring enclosure that makes it possible for any signal acquired by the system to be measured with hand-held equipment. This data can also be ported directly into a DCS or historian via Modbus or [optional] 4–20 mA outputs for remote viewing, trending, analysis, and alarming.

1.1. Key Specifications

Voltage:

- ±15 V DC
- 0–70 V RMS
- 0–100 V 0–Pk

Current:

- ±15 A DC
- 0–15 A RMS
- 0–20 A 0–Pk

Accuracy: ±1 V and 5% of current in specified range

Operating Temperature: –20°C to 55°C (–4°F to 131°F)

Signal Acquisition Rate: Shaft voltage and ground current are sampled at a rate of 100 kS/s

1.2. Proper Assurance Monitoring System Installation Required

All descriptions in this manual assume that the Assurance Monitoring System is connected via signal wires to Cutsforth's proprietary shaft-grounding and voltage-sensing hardware with rope wear indicators installed on the generator shaft.

1.3. Additional Resources

The following resources provide more information on the Assurance Monitoring System and associated equipment.

- Shaft Grounding Assembly Operations Manual

© Cutsforth 2026 | Cutsforth.com/Support

  - Series 1: EZDP-2007
  - Series 2: EZDP-2035
  - Series 3: EZDP-2068
- Installation Planning Guide: EZDP-2126
- Appropriate wiring diagram(s) for installed equipment

1.4. Technical Specifications

© Cutsforth 2026 | Cutsforth.com/Support

1.4.1. Monitoring System Enclosure

1.4.1.1. Painted Steel Enclosure

Catalog Number	A	B	C	Steel Type	Door/Body Gauge	Latch Qty
SNB-3734	11.81 in (300 mm)	11.81 in (300 mm)	7.87 in (200 mm)	Painted Steel, Cold Rolled	16	1

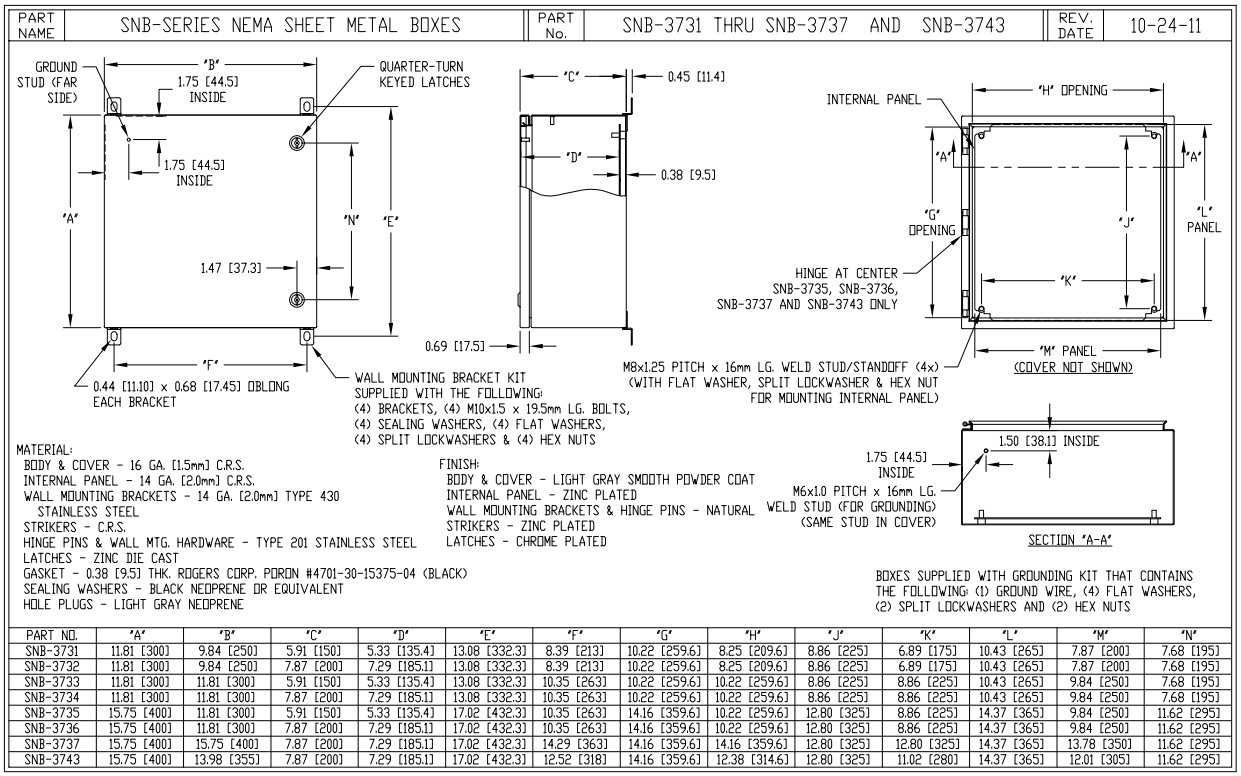

PART NO.	'A'	'B'	'C'	'D'	'E'	'F'	'G'	'H'	'J'	'K'	'L'	'M'	'N'
SNB-3731	11.81 [300]	9.84 [250]	5.91 [150]	5.33 [135.4]	13.08 [332.3]	8.39 [213]	10.22 [259.6]	8.25 [209.6]	8.86 [225]	6.89 [175]	10.43 [265]	7.87 [200]	7.68 [195]
SNB-3732	11.81 [300]	9.84 [250]	7.87 [200]	7.29 [185.1]	13.08 [332.3]	8.39 [213]	10.22 [259.6]	8.25 [209.6]	8.86 [225]	6.89 [175]	10.43 [265]	7.87 [200]	7.68 [195]
SNB-3733	11.81 [300]	11.81 [300]	5.91 [150]	5.33 [135.4]	13.08 [332.3]	10.35 [263]	10.22 [259.6]	10.22 [259.6]	8.86 [225]	8.86 [225]	10.43 [265]	9.84 [250]	7.68 [195]
SNB-3734	11.81 [300]	11.81 [300]	7.87 [200]	7.29 [185.1]	13.08 [332.3]	10.35 [263]	10.22 [259.6]	10.22 [259.6]	8.86 [225]	8.86 [225]	10.43 [265]	9.84 [250]	7.68 [195]
SNB-3735	15.75 [400]	11.81 [300]	5.91 [150]	5.33 [135.4]	17.02 [432.3]	10.35 [263]	14.16 [359.6]	10.22 [259.6]	12.80 [325]	8.86 [225]	14.37 [365]	9.84 [250]	11.62 [295]
SNB-3736	15.75 [400]	11.81 [300]	7.87 [200]	7.29 [185.1]	17.02 [432.3]	10.35 [263]	14.16 [359.6]	10.22 [259.6]	12.80 [325]	8.86 [225]	14.37 [365]	9.84 [250]	11.62 [295]
SNB-3737	15.75 [400]	15.75 [400]	7.87 [200]	7.29 [185.1]	17.02 [432.3]	14.29 [363]	14.16 [359.6]	14.16 [359.6]	12.80 [325]	12.80 [325]	14.37 [365]	13.78 [350]	11.62 [295]
SNB-3743	15.75 [400]	13.98 [355]	7.87 [200]	7.29 [185.1]	17.02 [432.3]	12.52 [318]	14.16 [359.6]	12.38 [314.6]	12.80 [325]	11.02 [280]	14.37 [365]	12.01 [305]	11.62 [295]

Specifications:

- UL 508A Listed: Type 1, 2, 4, 4X, 12, and 13
- UL File Number: E194432-20071011
- Meets NEMA 1, 2, 4, 4X, 12, 13 Requirements
- Meets IP66 Requirements
- 16 Gauge Cold Rolled Steel
- Light Gray Smooth Powder Coat
- Product Weight: 20 lb (9.1 kg)

© Cutsforth 2026 | Cutsforth.com/Support

1.4.1.2. Stainless Steel Enclosure

Catalog Number	A	B	C	Steel Type	Door/Body Gauge	Latch Qty
EN4SD12126S16	12.0 in (305 mm)	12.0 in (305 mm)	6.00 in (152 mm)	316 Stainless	16	1

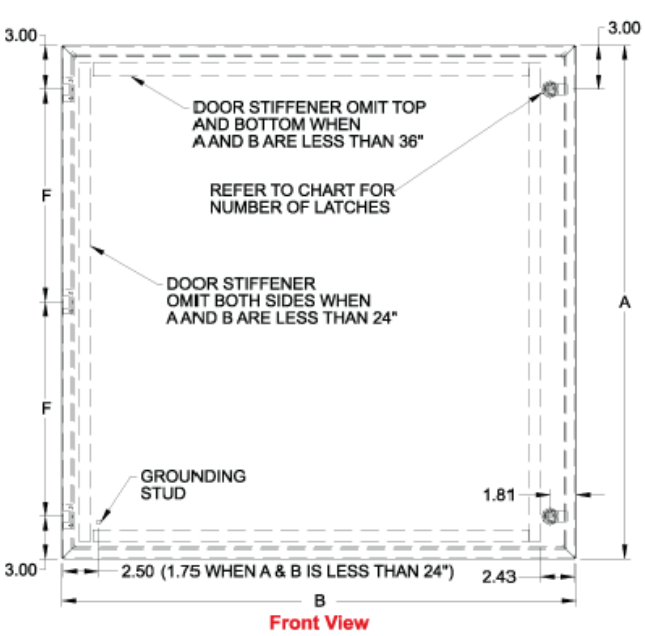

Front View

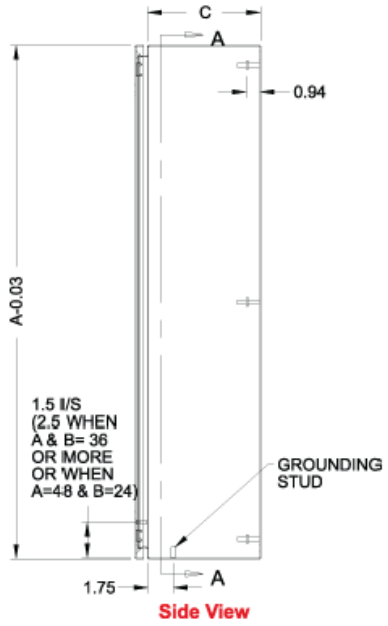

Side View

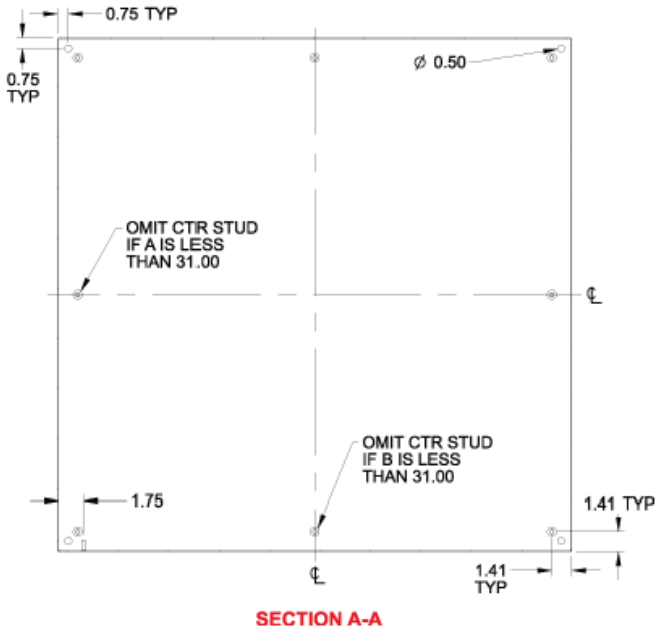

SECTION A-A

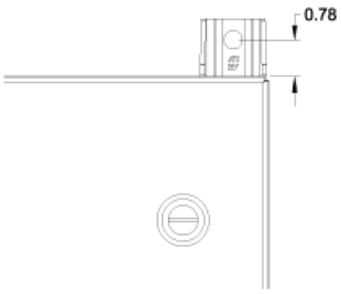

Mounting Foot Detail

© Cutsforth 2026 | Cutsforth.com/Support

Specifications:

▪ UL 508A Type 3R, 4, 4X, 12 ▪ UL File: E65234 ▪ CSA Type 3R, 4, 4X, 12 ▪ CSA Cert: LR21001	▪ Meets NEMA 3R, 4, 4X, 12, 13 Requirements ▪ Meets IP 66 Requirements ▪ 16 Gauge Stainless Steel ▪ Product Weight: 20 lb (9.1 kg)

1.4.2. AC Power Supply Requirements

Plant-supplied power source (AC)	85–264 VAC, 47–440 Hz, 10 W
Plant-supplied power source (DC)	20–32 VDC, 10 W
Circuit breaker	Internal 120 V, 5 A
Circuit draw under normal usage	Approximately 0.6 A

1.4.3. Approved Manufacturing Locations

Cutsforth, Inc.

5160 Industrial Place #101

Ferndale, WA 98248

1.4.4. Product Certifications

Table 1. EU Directive Information – CE Compliance

Electro Magnetic Compatibility (EMC) Directive 2014/30/EU	EN 61326-1:2013
Low Voltage Directive (LVD) 2014/35/EU	IEC 61010-1: 2010; EN 61010-1-2010
RoHS Directive 2011/65/EU	Large Scale Fixed Installation Exclusion

Table 2. North America

Electro Magnetic Compatibility (EMC)	Conforms to FCC 47CFR 15: 2022, Certified to CSA Std. ICES-001 2020
Safety	Conforms to UL 61010-1: 2012 Ed.3+R: 19-Jul-2019, Certified to CSA C22.2 61010-1: 2012 Ed. 3+U1;U2; A1

Table 3. UK Conformity Assessed (UKCA)

Electro Magnetic Compatibility (EMC) 2016	EN 61326-1:2013
Electrical Equipment (Safety) Regulations 2016	EN 61010-1-2010
Regulations: Restriction of Hazardous Substances (RoHS)	Large Scale Fixed Installation Exclusion

© Cutsforth 2026 | Cutsforth.com/Support

WEEE Directive Statement

In accordance with Article 14 of Directive 2012/19/EU on Waste Electrical and Electronic Equipment (WEEE), the following marking requirements apply:

- The directive applies to electrical and electronic equipment falling under Annex I, Category 9 of Directive 2012/19/EU.
- Products must include markings that clearly identify the producer and indicate that the equipment was placed on the market after 13 August 2005.
- The crossed-out wheeled bin symbol signifies that the equipment must not be disposed of with unsorted municipal waste. End users are required to follow applicable local recycling and disposal procedures for electrical and electronic equipment.
- The marking affixed to the product confirms that it falls within the scope of this directive.

1.4.5. Environmental Requirements

Storage Temperature	–40°C to 85°C (–40°F to 185°F)
Operating Temperature	–20°C to 55°C (–4°F to 131°F)
Storage Humidity	5% RH to 95% RH, noncondensing
Operating Humidity	10% RH to 90% RH, noncondensing
Maximum Altitude	2,000 m (6,560 ft)
Installation Location	For either indoor or outdoor use
Overvoltage Category	II
Pollution Degree	2

© Cutsforth 2026 | Cutsforth.com/Support

2. Installation

This section describes the installation of the Assurance Monitoring System. Before beginning the installation, thoroughly review the Assurance Monitoring System Installation Planning Guide (EZDP-2126).

2.1. Inside the Box

	Assurance Monitoring System
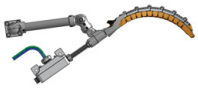	Shaft Grounding Assembly Plus installation hardware
	Signal cable – SGA to Assurance Monitoring System
	Signal cable – SGA to Assurance Field Monitoring System
	Enclosure Case Ground Wire
	Shaft Grounding/Contact Ropes
	Additional Items as Indicated on Order

© Cutsforth 2026 | Cutsforth.com/Support

2.2. Installation Overview

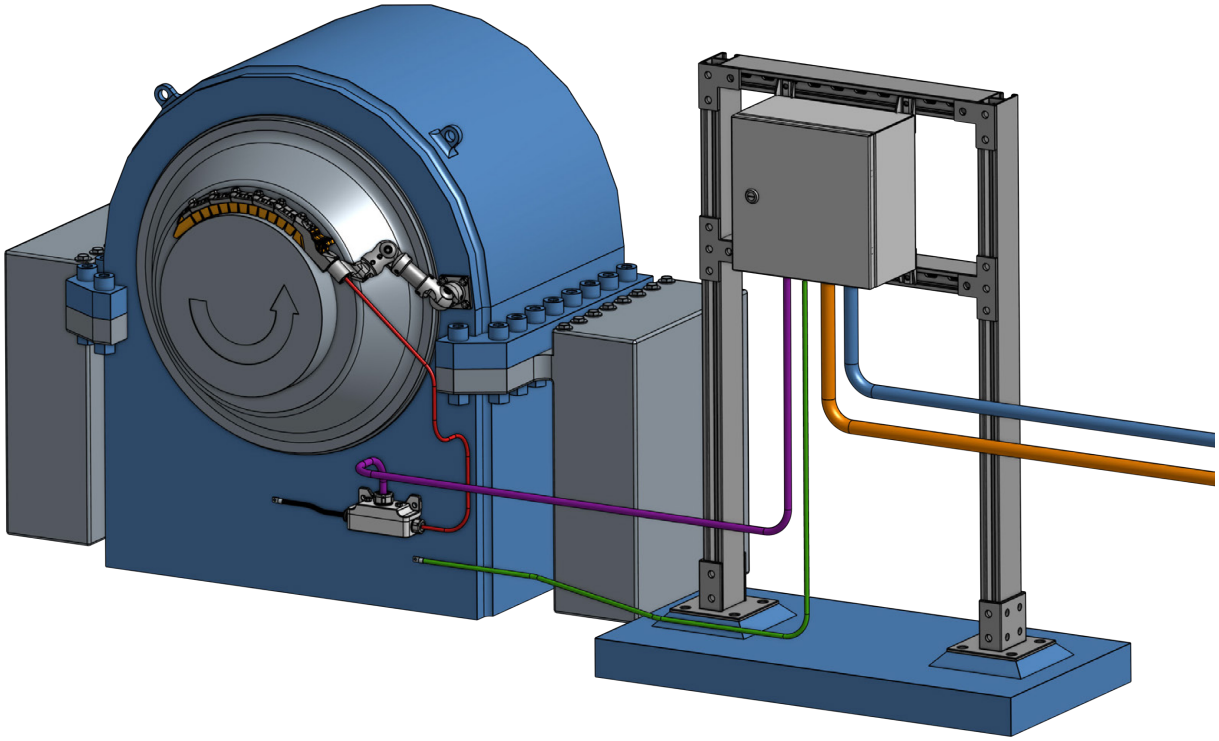

1. Mount the Assurance Monitoring System enclosure.
2. Connect the signal cables from the shaft-grounding hardware to the Assurance Monitoring System.
3. Run power to the Assurance Monitoring System.
4. Connect the Assurance Monitoring System's data output to the plant DCS or historian.

2.2.1. Conduit and Strut Channel Recommendations

Component	Standard Recommendation	Recommendation for High-Corrosion Environments
Conduit type	Galvanized rigid metal conduit (RMC)	Rigid aluminum conduit (RAC)
Conduit fittings type	Malleable	Aluminum
Strut channel type	Hot dipped galvanized, back-to-back	316 stainless steel
Mounting hardware	316 stainless steel	316 stainless steel
Liquid flexible metallic conduit	Type HCX	Type HCX

© Cutsforth 2026 | Cutsforth.com/Support

2.2.2. Recommended Strut Rack Design

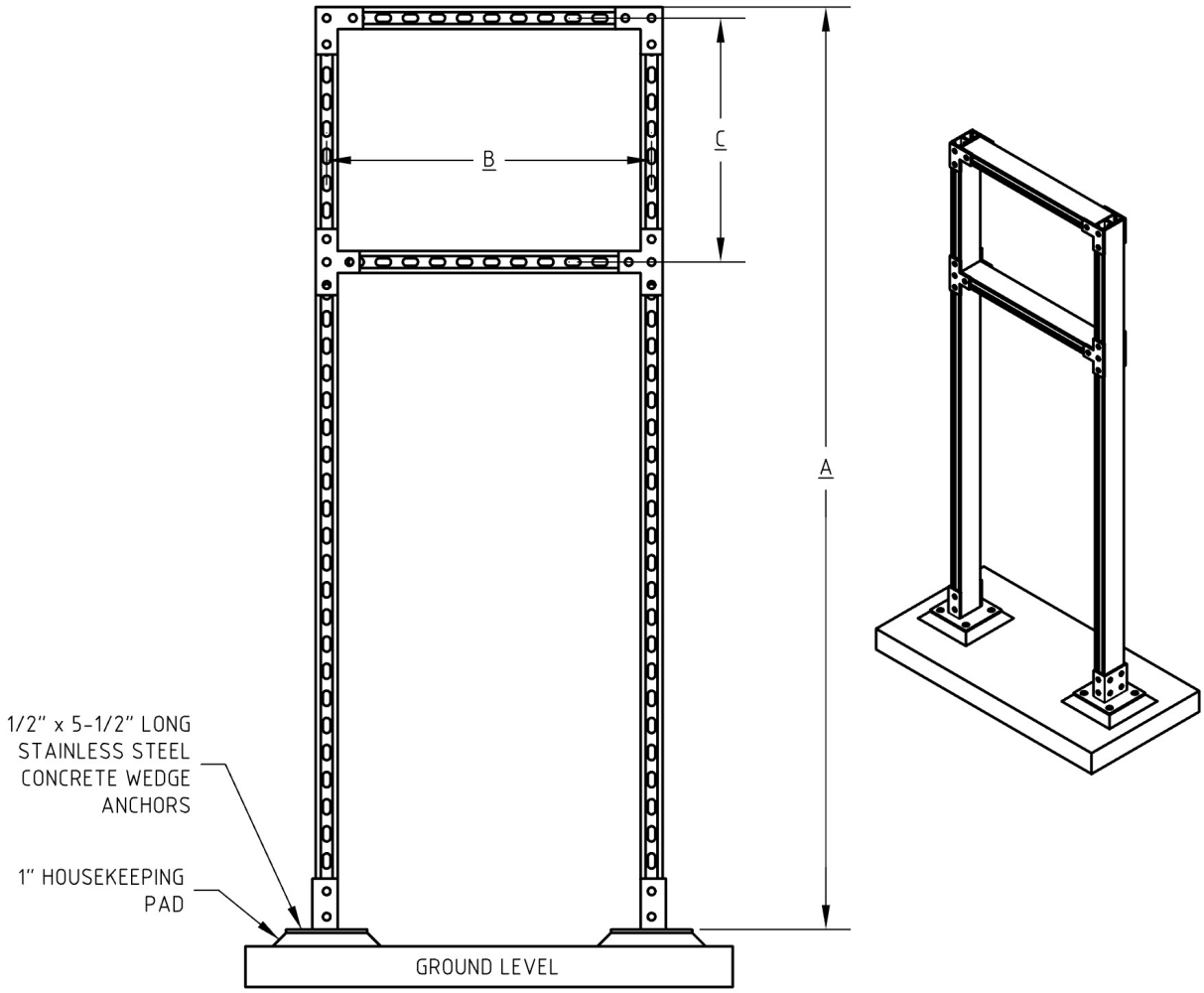

A (in (cm))	B (in (cm))	C (in (cm))
68 in (173 cm)	24 in (61 cm)	Refer to enclosure mounting dimensions

© Cutsforth 2026 | Cutsforth.com/Support

2.3. Enclosure Placement

This section covers the placement and mounting requirements for the Assurance Monitoring System enclosure.

The Assurance Monitoring System (A) is designed to be mounted using a strut channel rack (B). The enclosure should be mounted at the drive end of the generator as close to the Shaft Grounding Assembly as possible to minimize the run length of the signal cables while:

- Maintaining operator safety
- Meeting the requirements outlined in the Installation Planning Guide (EZDP-2126)

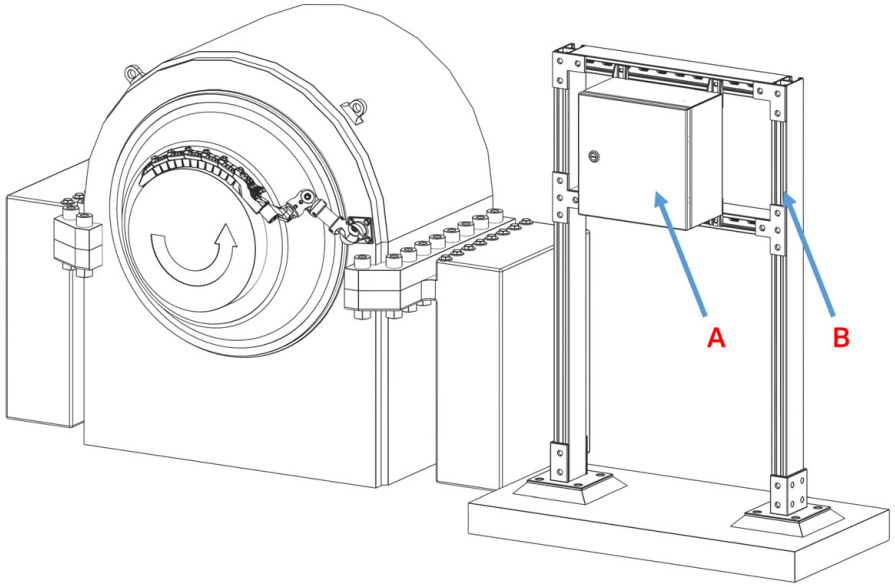

© Cutsforth 2026 | Cutsforth.com/Support

2.4. Routing the Signal Cables from the Shaft Grounding Assembly

This section covers routing and termination requirements for the Shaft Ground Assembly (SGA) signal cables.

1. Connect the supplied ethernet signal cables (D) to the Junction Box (B) attached to the SGA cable whip (A).
2. Connect the other end of the ethernet signal cables (D) to the Assurance Monitoring System according to the associated wiring diagram(s).
3. Drill and tap a 5/16"-18 hole in the unit case near the SGA junction box (B) for the ground wire connection. Route the 8 AWG ground wire (C) from the junction box to the unit case ground. Verify that the ground wire termination point will maintain a proper electrical connection; remove any paint, rust, or other contaminants from the location of the 5/16"-18 hole.

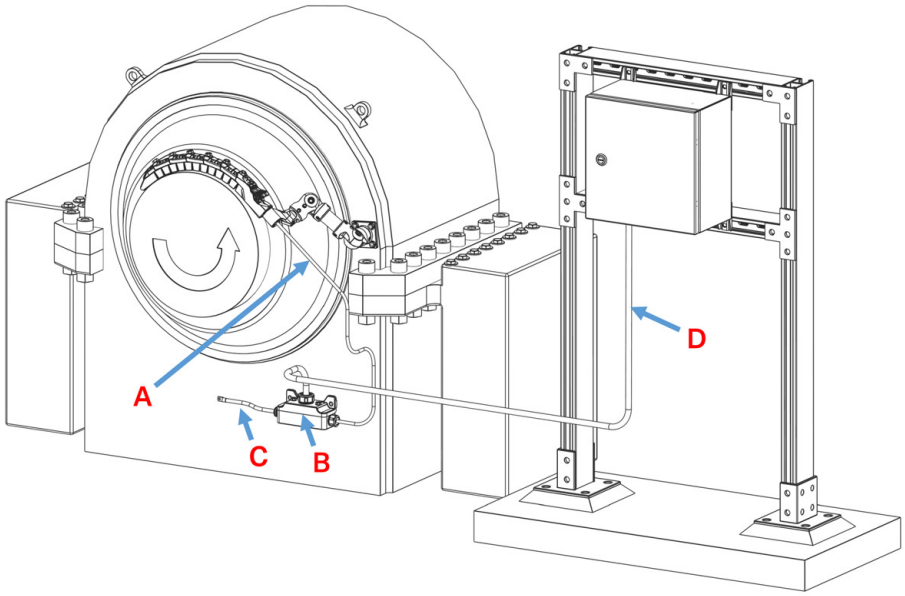

© Cutsforth 2026 | Cutsforth.com/Support

2.5. Running Plant Power and Data Connections

This section covers power requirements and data connections for the Assurance Monitoring System.

The Assurance Monitoring System has an internal, enclosed AC/DC converter which requires a power input of 85–264 V and 5 A AC at 50 or 60 Hz. The output of the internal power supply is 24 V, 5 A DC (120 W). The power input cabling (A) should be run to the Assurance Monitoring System in liquid-tight conduit.

The data output cabling (B) should be run to the control room using weather-proof conduit.

Where flexible conduit is used, Cutsforth recommends the use of type-HCX, high-temp, flexible, metallic conduit (LFMC).

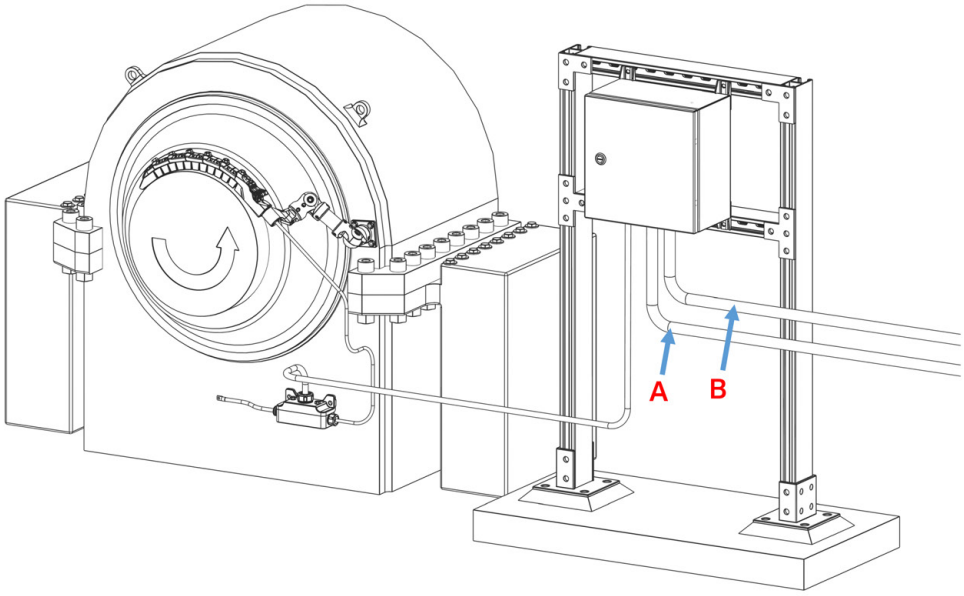

© Cutsforth 2026 | Cutsforth.com/Support

2.6. Terminating Enclosure Case Ground Connection

This section covers the routing and the termination of the Assurance Monitoring System's enclosure case ground wire.

The Assurance Monitoring System is supplied with 20ft of 12 AWG, single conductor wire (A) to electrically bond the monitoring system's enclosure to the generator unit case. Connect this wire to the grounding lug located on the external surface of monitoring system enclosure. Terminate the other end of this wire to the same unit case structure to which the main 8 AWG shaft ground wire is terminated. Trim this wire to length as necessary to fit the individual installation.

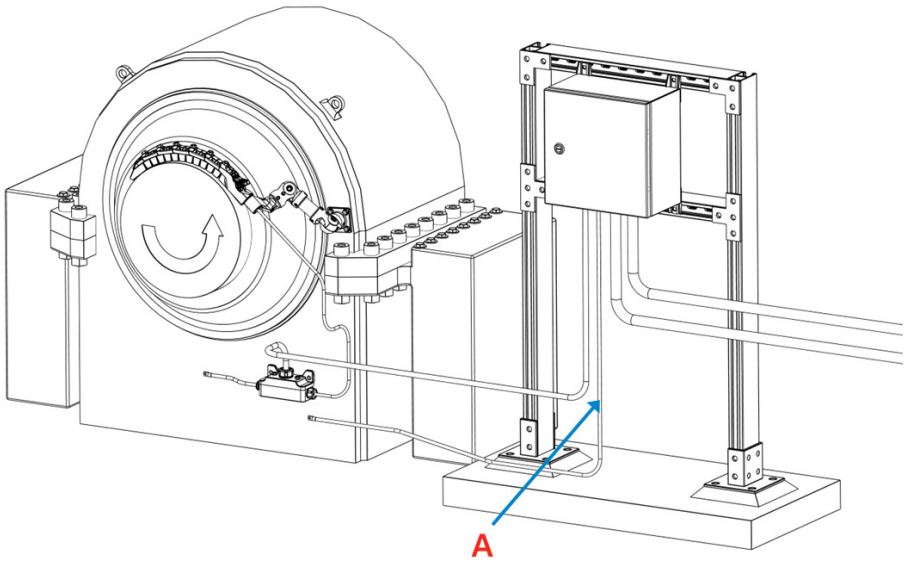

© Cutsforth 2026 | Cutsforth.com/Support

3. System Operation and Troubleshooting

3.1. Shaft Grounding Assembly

The Shaft Ground Assembly (SGA) contains two ropes, depicted in the figure below. Both ropes provide grounding. The grounding rope (A) acts as the primary direct connection between the generator shaft and the unit case, and the metering rope (B) connects the shaft to the unit case through a small resistor which facilitates measuring shaft voltage while also providing a secondary ground connection. The metering rope also provides temporary primary grounding when the grounding rope is being replaced or is otherwise disconnected from the shaft temporarily.

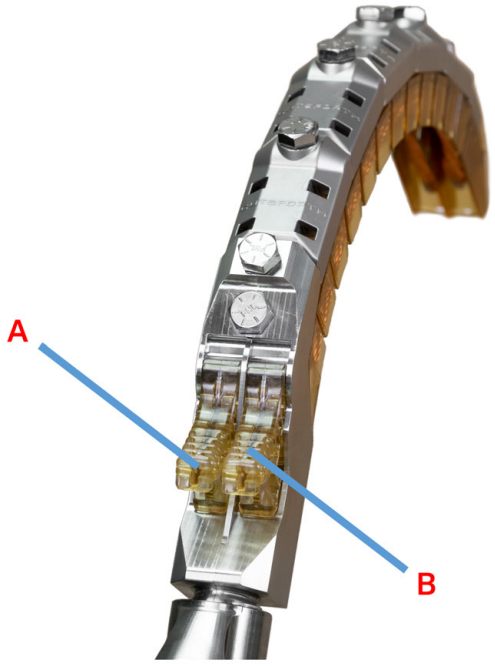

A – Grounding Rope
B – Metering Rope

The Assurance Monitoring System provides easy access to test points for diagnostics and preventative maintenance. Careful monitoring can reveal indications that are possible fault conditions.

3.2. OLED Display

The Assurance Monitoring System is equipped with an OLED display that shows live shaft voltage and ground current measurements as well as rope status information. This information is split into three different screens as outlined in the following table. There is a push button adjacent to the display that can be pressed to cycle through the various screens.

© Cutsforth 2026 | Cutsforth.com/Support

Screen 1	▪ Shaft Voltage DC ▪ Shaft Voltage RMS ▪ Shaft Voltage 0–Peak
Screen 2	▪ Ground Current DC ▪ Ground Current RMS ▪ Ground Current 0–Peak
Screen 3	▪ Meter Rope Status ▪ Ground Rope Status ▪ Firmware Version

3.3. Monitoring Test Points



ELECTRICAL DANGER

Only qualified electrical personnel should take measurements at the remote test points. For any of the test points on the faceplate, use a hand-held voltmeter, oscilloscope, clamp-on ammeter, or other appropriate testing device. Always follow proper electrical safety procedures.

© Cutsforth 2026 | Cutsforth.com/Support

> **CAUTION**
>
> Test points are susceptible to electrostatic discharge. Observe proper ESD handling precautions when interacting with the test points. If the unit does not appear to be operating normally, cycle power to the system by switching the main power switch off, then back on.

Test points in the monitoring system connect directly to the following sensor locations:

- "Shaft Voltage" is connected directly to the SGA's meter rope on the shaft.
- The negative test points are connected to the unit case grounding location and provide the ground reference for test point measurements.
- Each wear indicator test point is connected to a resistance-based circuit that will detect when the rope is 50% worn through (or higher).
- Ground current + and – are connected to the output of the ground current sensor which the main grounding wire connects to.

  Note: In order to measure ground current and rope status at the test points, monitoring must be powered on. All shaft voltage readings are direct connections and can be taken regardless of whether the monitoring system is powered on or off.

3.3.1. Ground Current Test Points

To measure current flowing to ground from the shaft, place your meter/oscilloscope probes on the ground current test points. Refer to the following table to convert the resulting voltage reading to the associated ground-current value.

Meter Reading (V)	Shaft-to-Ground Current (A) (–100 mV/Amp scale)
3.15	-15
2.65	-10
2.15	-5
1.65	0
1.15	5
0.65	10
0.15	15

3.3.2. Shaft Voltage Test Points

To read the shaft voltage, place your meter/oscilloscope probes on the shaft voltage test points. The resulting voltage or waveform read at this point represents the shaft voltage at the associated metering rope location. The shaft voltage test points do not require power, so valid measurements can be taken even if the monitoring system is powered off.

© Cutsforth 2026 | Cutsforth.com/Support

3.3.3. Wear Indicator Test Points

Cutsforth Shaft Grounding Assembly ropes come equipped with an insulated conductor threaded into the center of the grounding and metering ropes. If the rope has not worn out to its center point, the conductor insulation will be intact and there will be no electrical contact between the wear indicator conductor and the outer portion of the ground rope. When the conductor insulation has worn through, the Assurance Monitoring System will indicate that a rope fault has occurred. A rope fault can also be verified at the test points located on the faceplate of the monitoring system. To check for rope faults, place your meter probes on the wear indicator test points for the rope in question, and use the following guide.

Rope Fault Condition	Test Point Reading
No Rope Fault	5 V DC ± 1 V
Rope Fault	0 V DC ± 1 V

Each wear indicator test point is also equipped with its own LED that will flash when a rope fault is present or has occurred within the past 10 seconds. When no rope fault is present, the LED will be illuminated with a solid (i.e., not flashing) light.

3.3.3.1. Rope Fault Troubleshooting Recommendations

Using a voltmeter set to measure resistance, measure between the wear indicator contact and the outer rope contact on the underside of the rope grip to confirm whether or not the rope needs replacement. See the image below:

© Cutsforth 2026 | Cutsforth.com/Support

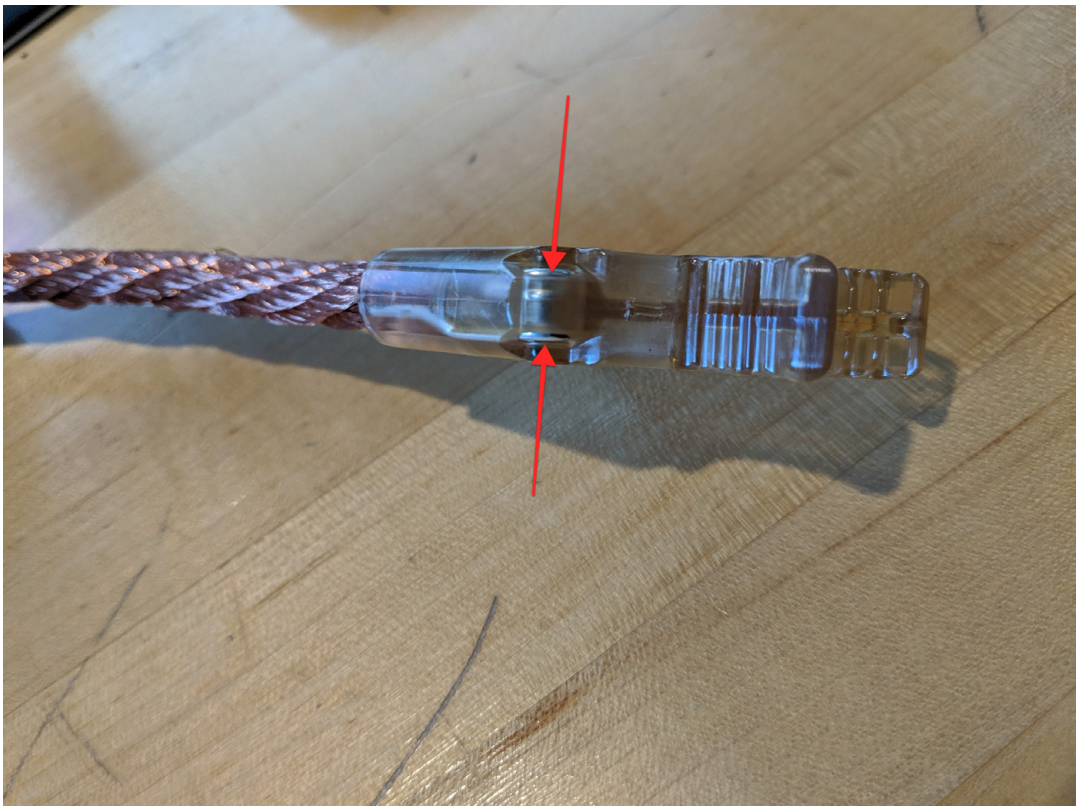

- If 500 Ohms or greater resistance is measured, the rope does not require replacement.
- If less than 500 Ohms is measured, the rope requires replacement, even if it may not look like it.

If the above recommendation does not resolve the issue, contact Cutsforth Support.

3.4. Advanced Troubleshooting

3.4.1. Possible Grounding Fault Indications

Every generator has its own distinct set of normal operating conditions. Normal conditions on one generator may be alarming on another, even if the two units are of the same type. Plant personnel responsible for monitoring the systems should be familiar with the normal average and peak voltage and current levels for each unit. It is also recommended to periodically view the waveforms from the monitoring system's test points and watch for signatures that are markedly different from what has been viewed in the past. A change in a unit's waveform output can be a powerful indicator that either something within the generator may require attention or the grounding system needs maintenance.

The conditions listed in this section may be fault indications. This is not a comprehensive list; rather, it is intended to draw attention to scenarios that can warrant further investigation.

© Cutsforth 2026 | Cutsforth.com/Support

3.4.2. Grounding Current Steps Down and Shaft Voltage Steps Up

If a significant step down in grounding current takes place in conjunction with an increase in shaft voltage, this could indicate a potential loss of grounding and should be investigated immediately. Inspect the grounding assembly, grounding rope, and shaft surface for potential deterioration of the grounding rope-to-shaft connection.

3.4.3. Average and/or Zero-to-Peak Grounding Current and Shaft Voltages Step Down

If an unusual reduction in grounding current and shaft voltage occurs, it may be that a significant event had taken place. Has something else contacted the shaft or has a bearing lost insulation, allowing alternate paths to ground? Is the rope-to-shaft contact of sufficient integrity to allow current to flow freely when voltage is present? When grounding current and voltage are markedly lower than what is normally seen on the generator and no correlating operating condition exists to explain it, the grounding hardware should be evaluated to ensure that the generator shaft is grounded. Baseline measurements are crucial for identifying events of concern. Baseline readings should be known for generator online status, turning gear status, offline status, and at differing load levels, for comparisons when questions arise.

3.4.4. Average and/or Zero-to-Peak Shaft Voltages and Grounding Currents Step Up

Typically, shaft voltages and grounding currents on the generator increase or decrease in amplitude along with generator output levels and other operating conditions. Soon after installing, it is important to capture what normal readings are for the generator at different loads. Knowing the difference between the generator's grounding system's readings at lowest and highest generator outputs helps when it's time to fine tune the monitoring system's thresholds to avoid triggering snapshots and alarms at levels that are potentially just normal periods of greater demand. If taking the above into consideration does not resolve the higher levels, share the waveforms you are seeing with Cutsforth to compare them against our library of waveforms; they may indicate other problems occurring in the generator that are being detected by the grounding monitoring waveforms.

3.4.5. Average and/or Zero-to-Peak Shaft Voltages or Currents Trending Up or Down Over Time

Trending values on the generator can be a powerful diagnostic tool. If there is poor rope-to-shaft contact, tracking the trend will help to know if steps at remediation are effective, or not, before alarming takes place. If waveforms show, for example, that there are shorts in the stator winding insulation, trending the amplitude and frequency of the problem signature over time and at various unit loads can help give insight to whether the condition is getting worse and at what load the condition first appears, comparing now vs. the point when the condition was first identified.

© Cutsforth 2026 | Cutsforth.com/Support

4. Modbus Communication API

The Assurance Monitoring System is equipped with both TCP/IP and RTU (RS485) Modbus output options. Each Assurance device operates as a slave only.

4.1. Modbus Protocol Features

When using the RTU protocol, the Assurance Monitoring System will answer to a master query only if the query contains the same slave address as defined on the Assurance device. The permitted addresses range from 1 to 254 (0x01 to 0xFE), and there should be no controllers with the same address on the same line.

Feature	Description
Supported Functions	Read Input Register (0x03)
Cyclical Redundancy Check (CRC) *	16-bit value calculated by both devices. Error message displayed when values are not equal.

* During normal operation, the Modbus Master transmits Modbus RTU requests and automatically appends the required CRC-16 checksum to each message. The Assurance system receives incoming messages and verifies the accuracy of the CRC-16 checksum. If the CRC is found to be incorrect—whether due to electrical noise, timing discrepancies, or malformed messages—the Assurance system will disregard the request. In such cases, the Modbus Master will report a communication fault. This may be indicated as a timeout, absence of response, or an explicit error notification within the user interface. It is recommended to configure the Modbus Master to provide alerts or notifications if a communication fault with the Assurance system is detected, enabling prompt troubleshooting and system reliability.

Table 4. Default Modbus Settings

Parameter	Default Value
IP Address	192.168.1.222
TCP Port	502
Modbus ID	1
Baud Rate	115200
Parity	Even
Stop Bits	1

The Modbus settings on the Assurance Monitoring System can be configured using a serial console, such as PuTTY. The Assurance System can be connected to a laptop with the serial console software using the DB9 serial port located on the backside of the Assurance faceplate. This connection requires a standard straight-through serial cable (non null-modem). The baud rate for the DB9 port is 115200.

© Cutsforth 2026 | Cutsforth.com/Support

Below is a list of commands that may be useful in configuring the Assurance System.

Example Command	Result
showsettings	Shows the current Modbus settings
mbid 1	Sets the Modbus ID to 1
baudrate 9600	Sets the baud rate to 9600
stopbits 1	Sets the number of stop bits to 1
mbtcpport 502	Sets the TCP Port to 502
ipaddr 192.168.1.100	Sets the IP address to 192.168.1.100
subnet 255.255.255.0	Sets the subnet mask to 255.255.255.0
gateway 192.168.1.1	Sets the default gateway to 192.168.1.1

4.2. Termination Resistance

The Assurance Monitoring System features a block of DIP switches (SW1) to set the desired termination resistance for Modbus RS485 communication. SW1 is located on the back side of the Assurance faceplate assembly adjacent to the Modbus RS485 termination points. The below table outlines the available termination resistor settings with corresponding DIP switch configurations.

Termination Resistance Value	Switch 1	Switch 2	Switch 3	Switch 4
No Termination Resistance	Off	Off	Off	Off
60 Ohms	On	On	Off	Off
120 Ohms	On	Off	Off	Off

4.3. Address Declarations

Name	Value Type	Value Unit	Register Type	Address (Base 0)	Supported Functions
Shaft Voltage RMS	Float	Volts RMS	Input Register	30000	Read Input Register
Shaft Voltage 0–Peak	Float	Volts 0–Peak	Input Register	30002	Read Input Register
Shaft Voltage DC	Float	Volts DC	Input Register	30004	Read Input Register
Ground Current RMS	Float	Amps RMS	Input Register	30006	Read Input Register
Ground Current 0–Peak	Float	Amps 0–Peak	Input Register	30008	Read Input Register
Ground Current DC	Float	Amps DC	Input Register	30010	Read Input Register
Rope Status	Integer	Flag	Input Register	30012	Read Input Register

© Cutsforth 2026 | Cutsforth.com/Support

4.4. Rope Status Channel Interpretation

Integer Output	Interpretation
3	No Rope Fault (Normal)
2	Ground Rope Fault
1	Meter Rope Fault
0	Meter Rope and Ground Rope Fault

© Cutsforth 2026 | Cutsforth.com/Support

5. 4–20 mA Lines

The 4-20 mA outputs are an optional add-on and are not included in the standard Assurance package. If the 4-20 mA output package is purchased, the connection points will be located inside the Assurance Monitoring System enclosure and will be powered by the Assurance Monitoring System. Refer to your associated wiring diagram and the physical terminal labels to determine which signal pair is carried at each terminal connection point.

Shaft V RMS		Shaft V 0-Pk		Shaft V DC		Ground I RMS		Ground I 0-Pk		Ground I DC		Rope Status	
BK	WH	BK	WH	BK	WH	BK	WH	BK	WH	BK	WH	BK	WH
+	-	+	-	+	-	+	-	+	-	+	-	+	-

5.1. DCS Programming: Interpreting Output Values

The 4–20mA outputs are intended to be used with a plant DCS. Refer to the following tables when programming.

5.1.1. Channel 0: Shaft Voltage RMS

- Measurement Range: 0 to 70 V RMS
- 4–20 mA Scale: 1 mA = 4.375 V RMS

Shaft Voltage RMS (V)	4–20 mA Output
0	4
17.5	8
35	12
52.5	16
70	20

5.1.2. Channel 1: Shaft Voltage 0–Peak

- Measurement Range: 0 to 100 V 0–Peak
- 4–20 mA Scale: 1 mA = 6.25 V 0–Peak

Shaft Voltage 0–Peak (V)	4–20 mA Output
0	4
25	8
50	12
75	16
100	20

© Cutsforth 2026 | Cutsforth.com/Support

5.1.3. Channel 2: Shaft Voltage DC

- Measurement Range: –15 to +15 V DC
- 4–20 mA Scale: 1 mA = 1.875 V DC

Shaft Voltage DC (V)	4–20 mA Output
–15	4
–7.5	8
0	12
7.5	16
15	20

5.1.4. Channel 3: Ground Current RMS

- Measurement Range: 0 to 15 A RMS
- 4–20 mA Scale: 1 mA = 0.9375 A RMS

Ground Current RMS (A)	4–20 mA Output
0	4
3.75	8
7.5	12
11.25	16
15	20

5.1.5. Channel 4: Ground Current 0–Peak

- Measurement Range: 0 to 20 A 0–Peak
- 4–20 mA Scale: 1 mA = 1.25 A 0–Peak

Ground Current 0–Peak (A)	4–20 mA Output
0	4
5	8
10	12
15	16
20	20

5.1.6. Channel 5: Ground Current DC

- Measurement Range: –15 to +15 A DC
- 4–20 mA Scale: 1 mA = 1.875 A DC

© Cutsforth 2026 | Cutsforth.com/Support

Ground Current DC (A)	4–20 mA Output
–15	4
–7.5	8
0	12
7.5	16
15	20

5.1.7. Channel 6: Rope Status (Wear Indicator)

Rope Status	4–20 mA Output
No Rope Faults	4
Ground Rope Fault	12
Meter Rope Fault	16
Both Ropes Faulted	20

© Cutsforth 2026 | Cutsforth.com/Support

6. Calibration and Preventive Maintenance



ELECTRICAL DANGER

Calibration and maintenance are to be conducted only by qualified electrical, and monitoring systems, personnel.



ELECTRICAL DANGER

Follow all plant safety and lock-out/tag-out requirements before accessing the equipment referenced in these procedures.

6.1. Visually Inspect and Clean Assurance Monitoring System Electrical Components

Preventative Maintenance Need: Advised

Frequency: Annually

Action: Using a compressed-air duster approved for electronics, blow all dust and debris off the electrical components inside the Assurance Monitoring System.

6.2. Check Current Sensor, Voltage Sensor, and System Performance

Calibration Need: Advised

Frequency: Annually, as outage schedule permits, or if measurements suggest readings are inaccurate.

© Cutsforth 2026 | Cutsforth.com/Support

7. Reference Information

The following reference topics provide detailed technical information on the capabilities and legal information pertaining to the Assurance Monitoring System.

7.1. How Average and Peak Values are Calculated

- Average voltages and currents are calculated on the samples taken during each snapshot as the sum of (x)/N, where x is the array of samples acquired, and N is the number of samples.
- Zero-to-peak voltages and currents are calculated on the samples taken during each 0.02-second period by the following formula:

$$\max(x) - \min(x)$$

- Longer-term averages are calculated by accumulating averages for the specified period. They are then reset in preparation for the next calculation. The formula used is as follows:

$$NewAverage = \frac{(PreviousSampleCount * PreviousAverage) + NewSampleAverage}{PreviousSampleCount + 1}$$

7.2. Related Documents

Document Name	Document Number
Shaft Grounding System Operations Manual	Series 1: EZDP-2007 Series 2: EZDP-2035 Series 3: EZDP-2068
Assurance Monitoring System Installation Planning Guide	EZDP-2126
Assurance Monitoring System Wiring Diagram	Refer to product part number (e.g., EGMA-320)

© Cutsforth 2026 | Cutsforth.com/Support

8. Glossary

Assurance Monitoring System	A Cutsforth product which monitors shaft voltages and shaft currents to provide real-time data locally and data outputs for integration into a DCS or historian.
attenuation	The reduction of the amplitude of a signal due to excessive cable length.
AWG	American Wire Gauge
DC average	The average of the DC component measurements during a sample period as calculated by $\Sigma X/n$, where X is the array of samples acquired and n is the number of samples.
DCS	Distributed Control System
ground conductor	8 AWG, green ground conductor that carries the shaft current to the unit case ground location.
ground current	The electrical current between the shaft and the unit case ground through the ground conductor.
ground rope	The left rope in the Shaft Grounding Assembly, which provides the primary path to unit case ground through the 8AWG ground conductor.
impedance	The resistance to change in the current of a circuit.
LOTO	Lockout/Tagout
meter rope	The right rope in the Shaft Grounding Assembly which provides a shaft contact point at which shaft voltage readings are taken.
oscilloscope resolution	A measurement that describes the granularity of a waveform (like the resolution of a photograph).
RMS	
Shaft Grounding Assembly (SGA)	A Cutsforth product designed to provide a best-in-class ground connection, as well as a shaft contact point at which shaft voltage can be measured.
shaft voltage	The voltage potential between the shaft and the unit case ground as measured by the metering rope.

© Cutsforth 2026 | Cutsforth.com/Support

signal cable	Shielded cable that carries the voltage signals from the SGA and the SCA to the monitoring system.
unit	The equipment monitored by the Cutsforth monitoring system.
unit case ground	The lower half of the turbine case, generator case, or coupler case near the Shaft Grounding Assembly to which the shaft can be grounded.
zero-to-peak	A measurement of a signal calculated by |max(x)| or |min(x)|, whichever is greater, during a given period of time, where x is the array of samples acquired during that period.

© Cutsforth 2026 | Cutsforth.com/Support