CUTSFORTH

Installation Planning Guide
EZDP-2122 Rev E

Compact Brush Condition Monitoring

THE INFORMATION CONTAINED HEREIN IS CONFIDENTIAL AND PROPRIETARY TO CUTSFORTH AND SHALL NOT BE REPRODUCED OR DISCLOSED IN WHOLE OR PART FOR ANY DESIGN OR MANUFACTURE WITHOUT THE WRITTEN AUTHORIZATION OF CUTSFORTH.

Table of Contents

Legal Information 1
Limited Warranty 1
Copyright 2
Trademarks 2
U.S. Government Use and Rights 2
Patents 3
Federal Communications Commission Requirements 3
Compact Brush Condition Monitoring System 3
Brush Health Sensor 3
ISED Canada Regulatory Compliance Statement 4
Safety Information 5
1. Installation Planning Guide for the Cutsforth Compact Brush Condition Monitoring System 9
2. Installation Strategies 10
2.1. Identify a Suitable Installation Location for the Compact Brush Condition Monitoring System 10
2.2. Determine Optimal Antenna Location 11
2.3. Power Requirements 11
2.4. Conduit and Strut Channel Recommendations 12
2.4.1. Recommended Strut Rack Design 12
3. Diagrams 13
3.1. Conduit Layout 13
3.2. Monitoring System Enclosure 15
3.2.1. Painted Steel Enclosure 15
3.2.2. Stainless Steel Enclosure 16
4. Responsibilities 18
4.1. Planning Phase 18
4.2. Preparation for Service Phase 18
4.3. Cutsforth Service Phase – Cutsforth Technicians On-site 19
5. Glossary 20

© Cutsforth 2026 | Cutsforth.com/Support

Legal Information

Limited Warranty

This document is provided 'as is' and is subject to being changed, without notice, in future editions. Cutsforth reviews this document carefully for technical accuracy; however, CUTSFORTH MAKES NO EXPRESS OR IMPLIED WARRANTY AS TO THE ACCURACY OF THE INFORMATION WITHIN THIS MANUAL AS IT RELATES TO ANY SPECIFIC INSTALLATION. THE CUSTOMER IS RESPONSIBLE FOR VERIFYING INSTALLATION AND OPERATING CONDITIONS AT EACH INSTALLATION LOCATION AND FOR EACH ASSET AND EQUIPMENT TYPE ON WHICH THE PRODUCTS ARE INSTALLED OR USED. Cutsforth warrants that its hardware products will be free of defects in materials and workmanship that cause the product to fail to substantially conform to the applicable Cutsforth published specifications for one (1) year from the date of invoice.

For a period of ninety (90) days from the date of invoice, Cutsforth warrants that its software products will perform substantially in accordance with the applicable documentation provided with the software. Software or services provided on a subscription, hosted, or software-as-a-service basis are governed by the applicable license, subscription, or services agreement, and the warranty terms of that agreement control for those offerings. If Cutsforth receives notice of a defect or non-conformance during the applicable warranty period, Cutsforth will, in its discretion: (i) repair or replace the affected product, or (ii) refund the fees paid for the affected product. Repaired or replaced hardware will be warranted for the remainder of the original warranty period or ninety (90) days, whichever is longer. If Cutsforth elects to repair or replace the product, Cutsforth may use new or refurbished parts or products that are equivalent to new in performance and reliability and are at least functionally equivalent to the original part or product. You must obtain an RMA number from Cutsforth before returning any product to Cutsforth. Cutsforth reserves the right to charge a fee for examining and testing hardware not covered by the Limited Warranty.

This Limited Warranty does not apply if the defect of the product resulted from improper or inadequate maintenance, installation, repair, or calibration performed by a party other than Cutsforth; unauthorized modification; improper environment; use of an improper hardware or software key; improper use or operation outside of the specification for the product; improper voltages; accident, abuse, or neglect; or a hazard such as lightning, flood, or other act of nature.

If Customer and Cutsforth have entered into a separate signed written agreement governing the products or services, the terms of that agreement control to the extent they conflict with this statement.

THE REMEDIES SET FORTH ABOVE ARE EXCLUSIVE AND THE CUSTOMER'S SOLE REMEDIES, AND SHALL APPLY EVEN IF SUCH REMEDIES FAIL OF THEIR ESSENTIAL PURPOSE.

WARNING REGARDING USE OF CUTSFORTH PRODUCTS: CUSTOMER IS ULTIMATELY RESPONSIBLE FOR VERIFYING AND VALIDATING THE SUITABILITY AND RELIABILITY OF THE PRODUCTS WHENEVER THE PRODUCTS ARE INCORPORATED IN THEIR SYSTEM OR APPLICATION, INCLUDING THE APPROPRIATE DESIGN, PROCESS, AND SAFETY LEVEL OF SUCH SYSTEM OR APPLICATION. PRODUCTS ARE NOT DESIGNED, MANUFACTURED, OR TESTED FOR USE IN LIFE OR SAFETY CRITICAL SYSTEMS, OR ANY OTHER APPLICATION IN WHICH THE FAILURE OF THE PRODUCT

© Cutsforth 2026 | Cutsforth.com/Support

OR SERVICE COULD LEAD TO DEATH, PERSONAL INJURY, SEVERE PROPERTY DAMAGE OR ENVIRONMENTAL HARM (COLLECTIVELY, "HIGH-RISK USES"). CUTSFORTH PRODUCTS ARE MONITORING, MEASUREMENT, AND DIAGNOSTIC TOOLS; THEY ARE NOT PROTECTIVE DEVICES OR SAFETY SYSTEMS, AND THEY ARE NOT A SUBSTITUTE FOR CUSTOMER'S OWN INSPECTION, MAINTENANCE, AND ENGINEERING JUDGMENT. CUTSFORTH DOES NOT WARRANT THAT THE PRODUCTS WILL DETECT, PREDICT, OR PREVENT ANY PARTICULAR FAULT, CONDITION, OR FAILURE. FURTHER, PRUDENT STEPS MUST BE TAKEN TO PROTECT AGAINST FAILURES, INCLUDING PROVIDING BACK-UP AND SHUT-DOWN MECHANISMS. CUTSFORTH EXPRESSLY DISCLAIMS ANY EXPRESS OR IMPLIED WARRANTY OF FITNESS OF THE PRODUCTS OR SERVICES FOR HIGH-RISK USES.

TO THE MAXIMUM EXTENT PERMITTED BY APPLICABLE LAW, CUTSFORTH DOES NOT WARRANT, GUARANTEE, OR MAKE ANY REPRESENTATIONS REGARDING THE USE OF OR THE RESULTS OF THE USE OF THE PRODUCTS — INCLUDING ANY DATA, MEASUREMENTS, ALERTS, ANALYTICS, OR REPORTS GENERATED BY THE PRODUCTS — IN TERMS OF CORRECTNESS, ACCURACY, RELIABILITY, COMPLETENESS, OR OTHERWISE. CUTSFORTH DOES NOT WARRANT THAT THE OPERATION OF THE PRODUCTS WILL BE UNINTERRUPTED OR ERROR FREE. INCIDENTAL AND CONSEQUENTIAL DAMAGES, INCLUDING LOSS OF USE, LOSS OF DATA, AND LOSS OF PROFITS, ARE SPECIFICALLY EXCLUDED FROM THIS WARRANTY; THE MAXIMUM VALUE OF A WARRANTY CLAIM CANNOT EXCEED THE ORIGINAL VALUE OF THE AFFECTED ASSEMBLY OR COMPONENT. SOME JURISDICTIONS DO NOT ALLOW THE EXCLUSION OR LIMITATION OF IMPLIED WARRANTIES OR OF INCIDENTAL OR CONSEQUENTIAL DAMAGES; IN THOSE JURISDICTIONS, THE ABOVE EXCLUSIONS AND LIMITATIONS APPLY TO THE MAXIMUM EXTENT PERMITTED BY LAW.

Copyright

Under copyright law, this publication may not be reproduced or transmitted in any form, electronic or mechanical, including photocopying, recording, storing in an information retrieval system, or translating, in whole or in part, without the prior written consent of Cutsforth. Cutsforth respects the intellectual property of others, and we ask our users to do the same. Cutsforth software is protected by copyright and other intellectual property laws. Cutsforth software is licensed, not sold, and may be installed and used only in accordance with the applicable license or subscription terms, including any restriction to the hardware or systems for which it was licensed. Reproduction of software or written materials is prohibited unless Customer has obtained a license for that express purpose.

Trademarks

Cutsforth and the Cutsforth logo are trademarks of Cutsforth, Inc. All other trademarks are the property of their respective owners.

U.S. Government Use and Rights

Cutsforth products are commercial products, and Cutsforth services are commercial services, as those terms are defined in FAR 2.101. Cutsforth hardware products, where offered without modification and sold in substantial quantities in the commercial marketplace, are commercially available off-the-shelf (COTS) items as defined in FAR 2.101. Cutsforth products were developed exclusively at private expense.

Cutsforth software is commercial computer software, and the accompanying documentation is commercial computer software documentation. If the software or documentation is acquired by or on

behalf of the U.S. Government or a U.S. Government prime contractor or subcontractor (at any tier), the Government's rights in the software and documentation are only those set forth in the applicable Cutsforth license or subscription agreement, in accordance with FAR 12.212 and DFARS 227.7202-1 through 227.7202-4, or the successor provisions thereto. Technical data provided with Cutsforth products is furnished with limited rights in accordance with DFARS 252.227-7015 where applicable.

Cutsforth products and hosted services are not authorized for the processing or storage of classified information. Unless expressly agreed by Cutsforth in a signed writing, Cutsforth products and hosted services are not intended or authorized for the processing or storage of Controlled Unclassified Information (CUI). Customer is responsible for ensuring that information provided to or generated within Cutsforth products and services complies with the information-security, export-control, and critical infrastructure information requirements applicable to Customer, including, where applicable, requirements governing CUI and Critical Energy/Electric Infrastructure Information (CEII).

Patents

Please send patent information requests to patents@cutsforth.com.

Federal Communications Commission Requirements

Compact Brush Condition Monitoring System

Utilizes Intel RF module 8265NG

FCC ID: PD98265NG

Brush Health Sensor

Part #: EBHS001

FCC ID: 2ARPJ-EBHS001

This device complies with part 15 of the FCC Rules. Operation is subject to the following two conditions:

(1) This device may not cause harmful interference, and

(2) this device must accept any interference received, including interference that may cause undesired operation.

Caution: User changes or modifications not expressly approved by the party responsible for compliance could void the user's authority to operate the equipment.

© Cutsforth 2026 | Cutsforth.com/Support

Note: This equipment has been tested and found to comply with the limits for a Class A digital device, pursuant to part 15 of the FCC Rules. These limits are designed to provide reasonable protection against harmful interference when the equipment is operated in a commercial environment. This equipment generates, uses, and can radiate radio frequency energy and, if not installed and used in accordance with the instruction manual, may cause harmful interference to radio communications. Operation of this equipment in a residential area is likely to cause harmful interference in which case the user will be required to correct the interference at his own expense.

ISED Canada Regulatory Compliance Statement

Compact Brush Condition Monitoring System – **IC ID:** 1000M-8265NG

Brush Health Sensor – **IC ID:** 24545-EBHS001

This device contains licence-exempt transmitter(s)/receiver(s) that comply with Innovation, Science and Economic Development Canada licence-exempt RSS(s). Operation is subject to the following two conditions:

1. This device may not cause interference.
2. This device must accept any interference, including interference that may cause undesired operation of the device.

L'émetteur/récepteur exempt de licence contenu dans le présent appareil est conforme aux CNR d'Innovation, Sciences et Développement économique Canada applicables aux appareils radio exempts de licence. L'exploitation est autorisée aux deux conditions suivantes :

1. L'appareil ne doit pas produire de brouillage;
2. L'appareil doit accepter tout brouillage radioélectrique subi, même si le brouillage est susceptible d'en compromettre le fonctionnement.

© Cutsforth 2026 | Cutsforth.com/Support

Safety Information

Safety Information [English]

Following is important safety information. For safe installation and operation of this equipment, be sure to read and understand all cautions and warnings.

Safety Conventions

NOTE:

Additional information.

ELECTRICAL DANGER

Indicates an action or specific equipment area that can result in personal injury or death from an electrical hazard if proper precautions are not taken.

CAUTION

Indicates a hazardous situation that, if not avoided, could result in minor or moderate injury or equipment damage.

WARNING

Indicates a hazardous situation that, if not avoided, could result in death or serious injury.

ROTATING PART CAUTION

Indicates possible injury from rotating parts.

DANGER

Indicates a hazardous situation that, if not avoided, will result in death or serious injury.

General Safety Instructions

ELECTRICAL DANGER

Only qualified personnel who recognize shock hazards and are familiar with the safety precautions required to avoid injury should work with Cutsforth products. Among the many considerations are the following:

- Avoid contact with energized circuits.
- Avoid contact with rotating parts.
- Never install any component that appears not to be functioning in a normal manner.
- Always ensure proper installation of the holder assembly and shaft grounding rope.

© Cutsforth 2026 | Cutsforth.com/Support

ELECTRICAL DANGER

Before working on the generator, de-energize, lock out, and tag out all power sources to the generator, shaft, and accessory devices. Electric shock and death may result due to failure to heed this warning.

ROTATING PART CAUTION

High-voltage and rotating parts can cause serious or fatal injury. Installation, operation, and maintenance of this product must be performed only by qualified personnel, in accordance with all applicable safety regulations and guidelines.

WARNING

Never mix different carbon brush grades or brushes from different manufacturers on the same unit.

LIFTING EQUIPMENT

For configurations that weigh more than 18 kg (40 lbs.), please utilize team lifting techniques to lift and move the equipment, including lifting with the legs, and avoid twisting while moving the equipment.

© Cutsforth 2026 | Cutsforth.com/Support

Consignes de Sécurité [Français]

Les informations qui suivent sont essentielles afin d'assurer la sécurité de l'utilisateur lors de l'installation et de l'opération de l'équipement. Assurez-vous de bien lire et de comprendre tous les avertissements et mises en garde qui suivent.

Conventions de Sécurité

NOTE:

Informations supplémentaires.

RISQUES DE CHOC ÉLECTRIQUE

Indique que l'action ou la partie de l'équipement concernée peut mener à des blessures par électrisation ou à la mort par électrocution si les précautions adéquates ne sont pas prises.

MISE EN GARDE

Indique la présence d'une situation dangereuse qui, si elle n'est pas évitée, pourrait mener à des blessures mineures à modérées ou à des dommages matériels.

AVERTISSEMENT

Indique la présence d'une situation dangereuse qui, si elle n'est pas évitée, pourrait mener à des blessures sévères ou à la mort.

MISE EN GARDE : PIÈCE ROTATIVE

Indique la présence de pièces d'équipement rotatives pouvant causer des blessures.

DANGER

Indique la présence d'une situation dangereuse qui, si elle n'est pas évitée, pourrait mener à des blessures sévères ou à la mort.

Consignes de Sécurité Générales

RISQUES DE CHOC ÉLECTRIQUE

L'utilisation des produits Cutsforth n'est recommandée qu'aux professionnels qualifiés qui savent comment reconnaître la présence de risques de choc électrique ainsi que les consignes de sécurité à suivre pour éviter les blessures liées à ces risques. Lesdites consignes de sécurité incluent, sans s'y limiter :

- Éviter tout contact avec des circuits alimentés;
- Éviter tout contact avec des pièces d'équipement rotatives;
- Ne jamais installer de composante ne paraissant pas fonctionner normalement;
- Toujours s'assurer que la structure de soutien et le câble de terre de l'arbre de la génératrice sont correctement installés.

© Cutsforth 2026 | Cutsforth.com/Support

RISQUES DE CHOC ÉLECTRIQUE

Avant de travailler sur la génératrice, désalimentez, cadenassez et étiquetez toutes les sources d'énergies liées à la génératrice, à l'arbre et aux appareils accessoires. L'opérateur s'expose à des risques de chocs électriques pouvant causer la mort s'il ne tient pas compte de cet avertissment.

MISE EN GARDE : PIÈCE ROTATIVE

Les pièces d'équipement rotatives et sous haute tension peuvent causer des blessures sévères ou fatales. L'installation, l'opération et la manutention de ce produit ne doivent être faites que par des professionnels qualifiés et en respectant toutes les règles et consignes de sécurité applicables.

AVERTISSEMENT

Ne jamais utiliser de frotteurs de différentes qualités ou venant de différents manufacturiers sur le même appareil.

ÉQUIPEMENT DE LEVAGE

Pour les configurations pesant plus de 18 kg (40 lb), veuillez recourir à des techniques de levage en équipe pour soulever et déplacer l'équipement — notamment en sollicitant les jambes — et évitez toute torsion du corps lors du déplacement.

© Cutsforth 2026 | Cutsforth.com/Support

1. Installation Planning Guide for the Cutsforth Compact Brush Condition Monitoring System

This document serves as a guide for planning the installation of .

> This manual does not cover all details or variations in equipment, nor does it consider every possible contingency for installation, operation, or maintenance. If you have questions or concerns that are not addressed in this manual, contact Cutsforth Engineering Support.

© Cutsforth 2026 | Cutsforth.com/Support

2. Installation Strategies

Determine the best component locations for your installation by applying the following strategies.

2.1. Identify a Suitable Installation Location for the Compact Brush Condition Monitoring System

The Compact Brush Condition Monitoring System has an operating temperature range of -20°C (-4°F) to 70°C (158°F). Avoid mounting the enclosure in areas that approach the limits of or depart from this temperature range on a regular basis. If possible, avoid mounting the monitoring system in a location that experiences direct sunlight for extended periods of time throughout the day. If sunshine exposure is unavoidable, inquire with Cutsforth about installation of a sun-shield.

The monitoring system should be installed in such a way that does not complicate generator disassembly during outages.

The monitoring system should be mounted in a location that does not experience excessive vibrations. Mounting directly to rotating equipment, such as a generator, or other structures with known vibrations, is not recommended. All cabling should be strain-relieved near input connectors. Take care to not directionally bias cable connectors when applying strain relief.

The Cutsforth Brush Health Sensors will be installed on Cutsforth EASYchange® brush holder equipment. This is a pre-requisite for installation. The Compact Brush Condition Monitoring System display is the HMI (Human-Machine Interface) component for the system. It will be important to select a cBCM mounting location that is in close proximity to the collector area. A worker performing brush changes will interact with the cBCM system and the brushes on a brush-by-brush basis. Therefore, a mounting location within a few steps of the brush gear makes sense whereas a distant location would not. See below image for example. The Compact Brush Condition Monitoring System enclosures are typically mounted using a Unistrut® frame as shown in the example below.

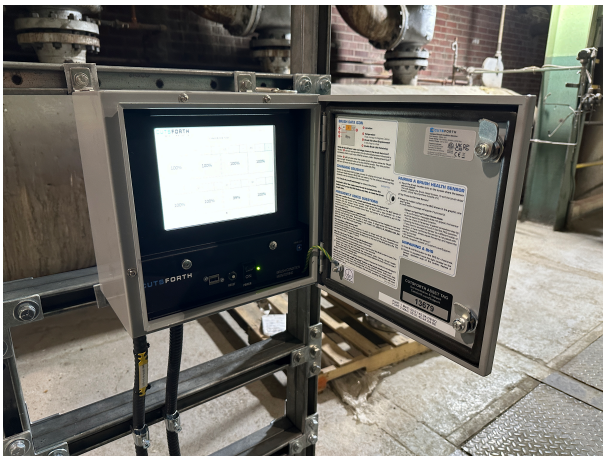

© Cutsforth 2026 | Cutsforth.com/Support

2.2. Determine Optimal Antenna Location

Physical barriers may be present between the Brush Health Sensors and the Compact Brush Condition Monitoring System. The ideal antenna placement **(A)** would be one which does not have any physical barriers between the Brush Health Sensors and the antenna. Penetrations may be required in the brush compartment in order to mount the antenna in the optimal position. Cutsforth recommends the antenna be placed inside the exciter enclosure.

2.3. Power Requirements

Power Requirement	Value
Voltage	85-264 VAC
Recommended breaker size	20 A
Recommended power cabling wire gauge	12 AWG
Actual operational current draw	~ .5 A at 120 VAC

© Cutsforth 2026 | Cutsforth.com/Support

2.4. Conduit and Strut Channel Recommendations

Component	Standard Recommendation	Recommendation for High-Corrosion Environments
Conduit type	Galvanized rigid metal conduit (RMC)	Rigid Aluminum Conduit (RAC)
Conduit fittings type	Malleable	Aluminum
Strut channel type	Hot dipped galvanized, back-to-back	316 Stainless steel
Mounting hardware	316 Stainless steel	316 Stainless steel
Liquid flexible metallic conduit	Type HCX	Type HCX

Cutsforth recommends that a duct seal be used to seal the inside of any conduit entering the Cutsforth monitoring system enclosure(s). The duct seal should be non-permanent in nature to accommodate future equipment or cable maintenance.

2.4.1. Recommended Strut Rack Design

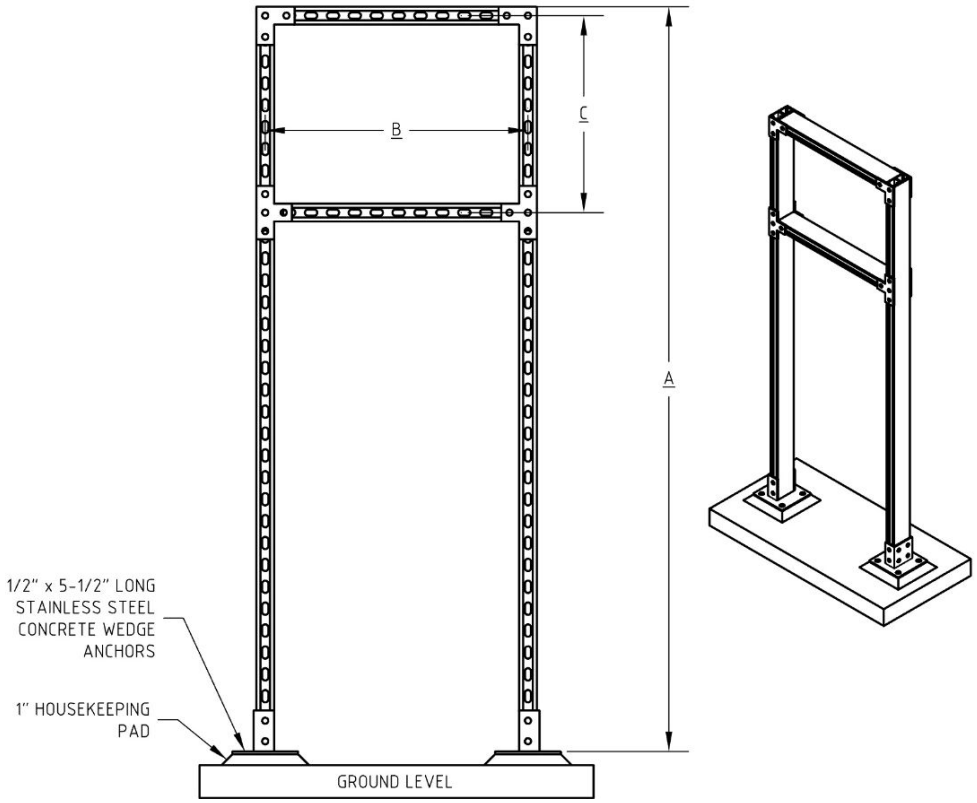

A (in (cm))	B (in (cm))	C (in (cm))
68 (173)	24 (61)	Refer to enclosure mounting feet dimensions

© Cutsforth 2026 | Cutsforth.com/Support

3. Diagrams

3.1. Conduit Layout

Color on Diagram (see below)	Conduit Run Description	Conduit Trade Size	Max Run Length	Wire Description	Purpose	Wire Supplied by	Conduit Supplied by
Blue	Plant 120VAC Power to cBCM	3/4 in (2 cm)	N/A	AC 85-264 V AC, 47-440 Hz, 10 W20 A Circuit	Power for the Monitoring System	Plant Electrical Contractor	Plant Electrical Contractor
Yellow	cBCM to Exciter Housing	1/2 in (1.27 cm)	18ft (5.5 m)	LMR-240 Coax with SMA ends	Brush Health Sensor antenna signal cable	Cutsforth	Plant Electrical Contractor
Red (Optional)	cBCM to Modbus Server	3/4 in (2 cm)	N/A	Ethernet cable (TCP/IP) or DB9 Serial cable (RTU)	Modbus data outputs	Plant Electrical Contractor	Plant Electrical Contractor

© Cutsforth 2026 | Cutsforth.com/Support

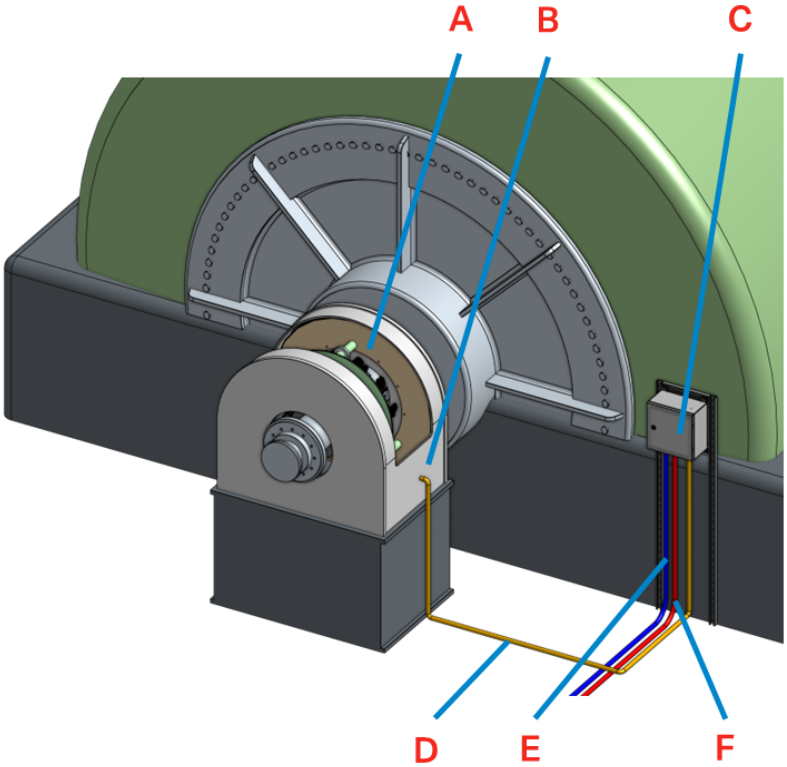

Part	Name
A	EASYchange® Brush Holders and Brush Health Sensors
B	Antenna (inside exciter housing)
C	Compact Brush Condition Monitoring System (cBCM)
D	Yellow: 1/2 in. (1.27 cm) Conduit from cBCM to Exciter Housing
E	Blue: 3/4 in. (2 cm) Conduit from Plant Power Supply to cBCM
F	(Optional) Red: 3/4 in. (2 cm) Conduit for Modbus Output from cBCM

© Cutsforth 2026 | Cutsforth.com/Support

3.2. Monitoring System Enclosure

3.2.1. Painted Steel Enclosure

Catalog Number	A	B	C	Steel Type	Door/Body Gauge	Latch Qty
SNB-3734	11.81 in (300 mm)	11.81 in (300 mm)	7.87 in (200 mm)	Painted Steel, Cold Rolled	16	1

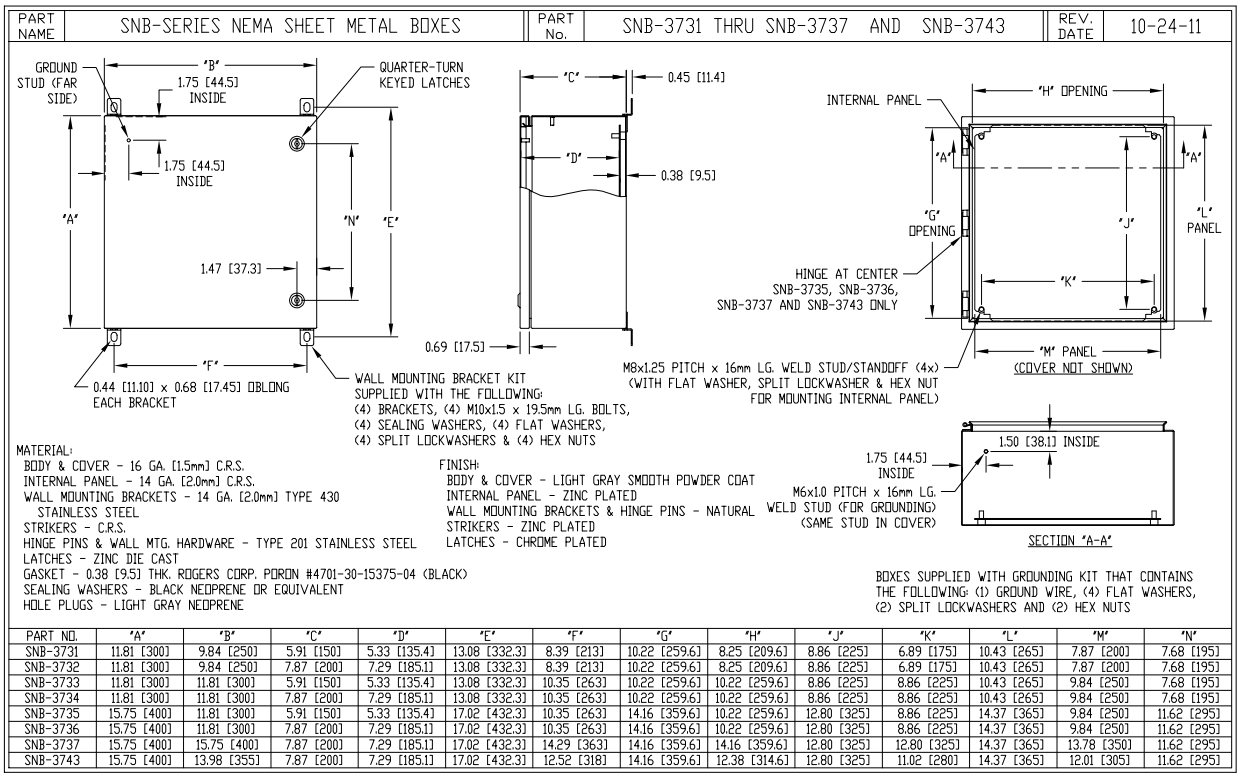

PART NO.	"A"	"B"	"C"	"D"	"E"	"F"	"G"	"H"	"J"	"K"	"L"	"M"	"N"
SNB-3731	11.81 [300]	9.84 [250]	5.91 [150]	5.33 [135.4]	13.08 [332.3]	8.39 [213]	10.22 [259.6]	8.25 [209.6]	8.86 [225]	6.89 [175]	10.43 [265]	7.87 [200]	7.68 [195]
SNB-3732	11.81 [300]	9.84 [250]	7.87 [200]	7.29 [185.1]	13.08 [332.3]	8.39 [213]	10.22 [259.6]	8.25 [209.6]	8.86 [225]	6.89 [175]	10.43 [265]	7.87 [200]	7.68 [195]
SNB-3733	11.81 [300]	11.81 [300]	5.91 [150]	5.33 [135.4]	13.08 [332.3]	10.35 [263]	10.22 [259.6]	10.22 [259.6]	8.86 [225]	8.86 [225]	10.43 [265]	9.84 [250]	7.68 [195]
SNB-3734	11.81 [300]	11.81 [300]	7.87 [200]	7.29 [185.1]	13.08 [332.3]	10.35 [263]	10.22 [259.6]	10.22 [259.6]	8.86 [225]	8.86 [225]	10.43 [265]	9.84 [250]	7.68 [195]
SNB-3735	15.75 [400]	11.81 [300]	5.91 [150]	5.33 [135.4]	17.02 [432.3]	10.35 [263]	14.16 [359.6]	10.22 [259.6]	12.80 [325]	8.86 [225]	14.37 [365]	9.84 [250]	11.62 [295]
SNB-3736	15.75 [400]	11.81 [300]	7.87 [200]	7.29 [185.1]	17.02 [432.3]	10.35 [263]	14.16 [359.6]	10.22 [259.6]	12.80 [325]	8.86 [225]	14.37 [365]	9.84 [250]	11.62 [295]
SNB-3737	15.75 [400]	15.75 [400]	7.87 [200]	7.29 [185.1]	17.02 [432.3]	14.29 [363]	14.16 [359.6]	14.16 [359.6]	12.80 [325]	12.80 [325]	14.37 [365]	13.78 [350]	11.62 [295]
SNB-3743	15.75 [400]	13.98 [355]	7.87 [200]	7.29 [185.1]	17.02 [432.3]	12.52 [318]	14.16 [359.6]	12.38 [314.6]	12.80 [325]	11.02 [280]	14.37 [365]	12.01 [305]	11.62 [295]

Specifications:

▪ UL 508A Listed: Type 1, 2, 4, 4X, 12, and 13 ▪ UL File Number: E194432-20071011 ▪ Meets NEMA 1, 2, 4, 4X, 12, 13 Requirements ▪ Meets IP66 Requirements	▪ 16 Gauge Cold Rolled Steel ▪ Light Gray Smooth Powder Coat ▪ Product Weight: 20 lb (9.1 kg)

© Cutsforth 2026 | Cutsforth.com/Support

3.2.2. Stainless Steel Enclosure

Catalog Number	A	B	C	Steel Type	Door/Body Gauge	Latch Qty
EN4SD12126S16	12.0 in (305 mm)	12.0 in (305 mm)	6.00 in (152 mm)	316 Stainless	16	1

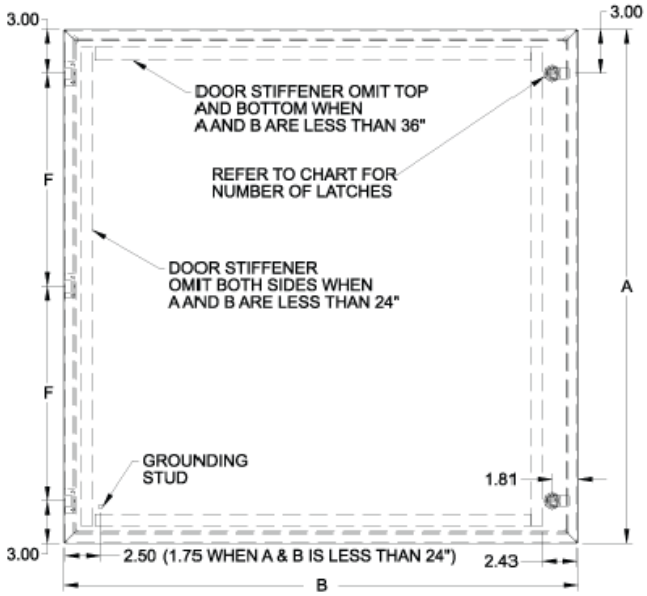

Front View

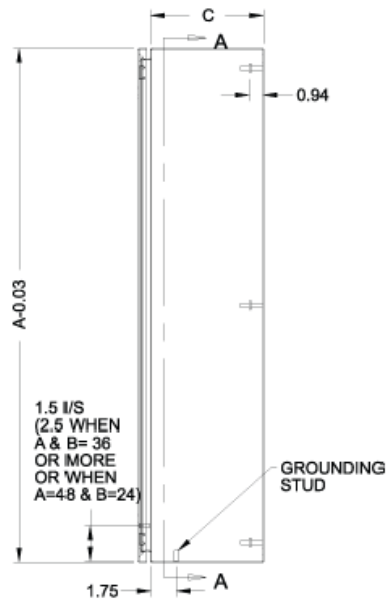

Side View

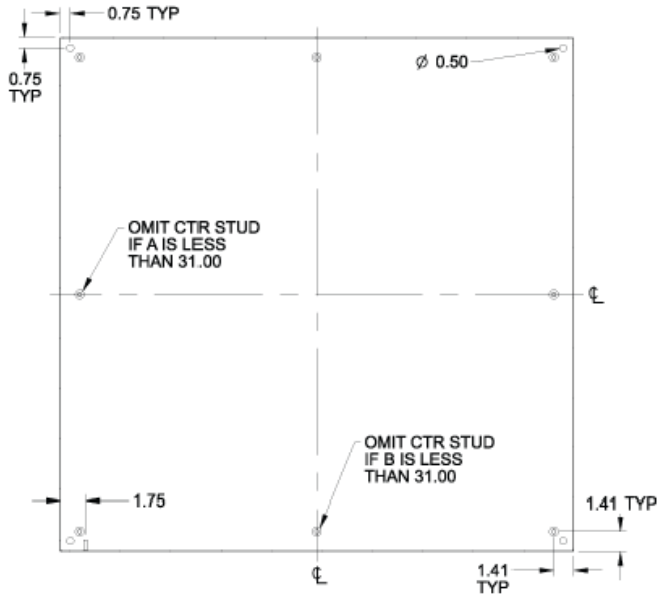

SECTION A-A

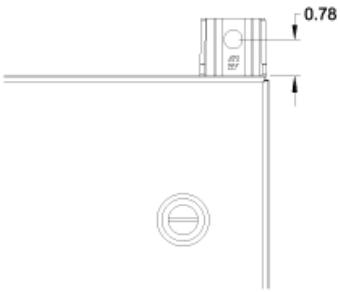

Mounting Foot Detail

© Cutsforth 2026 | Cutsforth.com/Support

Specifications:

▪ UL 508A Type 3R, 4, 4X, 12 ▪ UL File: E65234 ▪ CSA Type 3R, 4, 4X, 12 ▪ CSA Cert: LR21001	▪ Meets NEMA 3R, 4, 4X, 12, 13 Requirements ▪ Meets IP 66 Requirements ▪ 16 Gauge Stainless Steel ▪ Product Weight: 20 lb (9.1 kg)

© Cutsforth 2026 | Cutsforth.com/Support

4. Responsibilities

The following tables summarize the responsibilities of Cutsforth and the Plant during the three project phases.

4.1. Planning Phase

Task	Cutsforth	Plant
Review this planning guide and share it with key plant personnel involved in the project.		✓
Determine enclosure mounting position and conduit routes customized to the generator and ensure that they are within system guidelines.		✓
Select an electrical contractor and coordinate.		✓

4.2. Preparation for Service Phase

NOTE:

The responsibilities listed in the following table are critical to technician safety and proper installation of the Cutsforth equipment. Failure to comply may result in significant delays and additional charges.

Task	Cutsforth	Plant
Determine enclosure mounting position, customize conduit routes to generator, and ensure it is within system requirements.		✓
Mount monitoring system enclosure with supporting strut channel, punch conduit holes in enclosure, and install required conduit, complete with conductors installed.		✓
Install antenna in close proximity to brush gear.		✓
LOTO the following components: Main excitation system, ground detection system, and turning gear. LOTO needs to be in place prior to arrival of Cutsforth technicians.		✓
Provide 120V power (GFI-protected is preferred) for installation tooling.		✓
Provide adequate working access to installation site including scaffolding, if applicable. Scaffolding must be erected prior to arrival of Cutsforth technicians.		✓
Ensure that the shaft is off turning gear and stationary.		✓
Ensure that the shaft is fully coupled for installation.		✓
Ensure that the bearing caps immediately adjacent to the shaft grounding area are in place.		✓

© Cutsforth 2026 | Cutsforth.com/Support

4.3. Cutsforth Service Phase – Cutsforth Technicians On-site

Task	Cutsforth	Plant
Install antenna wiring in completed conduit raceways	✓	
Make system wiring terminations	✓	
Install Brush Health Sensors on EASYchange® brushes	✓	
System testing and commissioning – Perform pairing of wireless Brush Health Sensors with the cBCM System	✓	
Provide control room, server, network, and IT readiness required to test data communications beyond the monitoring system.		✓
Complete configuration, acceptance, and validation of data communications between the monitoring system and plant systems (DCS, historian, server, or network).		✓

Cutsforth's onsite testing and commissioning responsibilities are limited to verifying proper operation of the Compact Brush Condition Monitoring System and confirming that valid data outputs are available at the monitoring system interface.

End-to-end validation of data communications to plant-owned systems (including servers, DCS, historians, networks, cabling, and permissions) requires that all plant systems be fully installed and operational at the time of service. If these systems are not ready during the site visit, Cutsforth technicians will complete system verification using internal tools and conclude the onsite work. Any remaining integration or data communications is the responsibility of the plant and may require additional services.

© Cutsforth 2026 | Cutsforth.com/Support

5. Glossary

antenna	A device, typically mounted inside the exciter enclosure, which helps facilitate wireless communications between the Compact Brush Condition Monitoring System and the Brush Health Sensors.
antenna placement mode	An optional mode included in the Compact Brush Condition Monitoring System which displays the wireless signal strength of each sensor in or order to assist in successful placement of the antenna.
attenuation	The reduction of the amplitude of a signal due to excessive cable length.
AWG	American Wire Gauge
Brush Health Sensor (BHS)	A wireless sensor integrated into the brush spring which communicates with the Compact Brush Condition Monitoring System.
Compact Brush Condition Monitoring System	A Cutsforth EASYchange® monitoring system that performs automated measurements and brush health analytics that allow plant operators to improve the efficiency of technicians' daily and weekly tasks by dispatching them to the collector when maintenance is actually needed.
DCS	Distributed Control System
LOTO	Lockout/Tagout
Modbus RTU	Modbus Remote Terminal Unit
Modbus TCP	Modbus Transmission Control Protocol

© Cutsforth 2026 | Cutsforth.com/Support